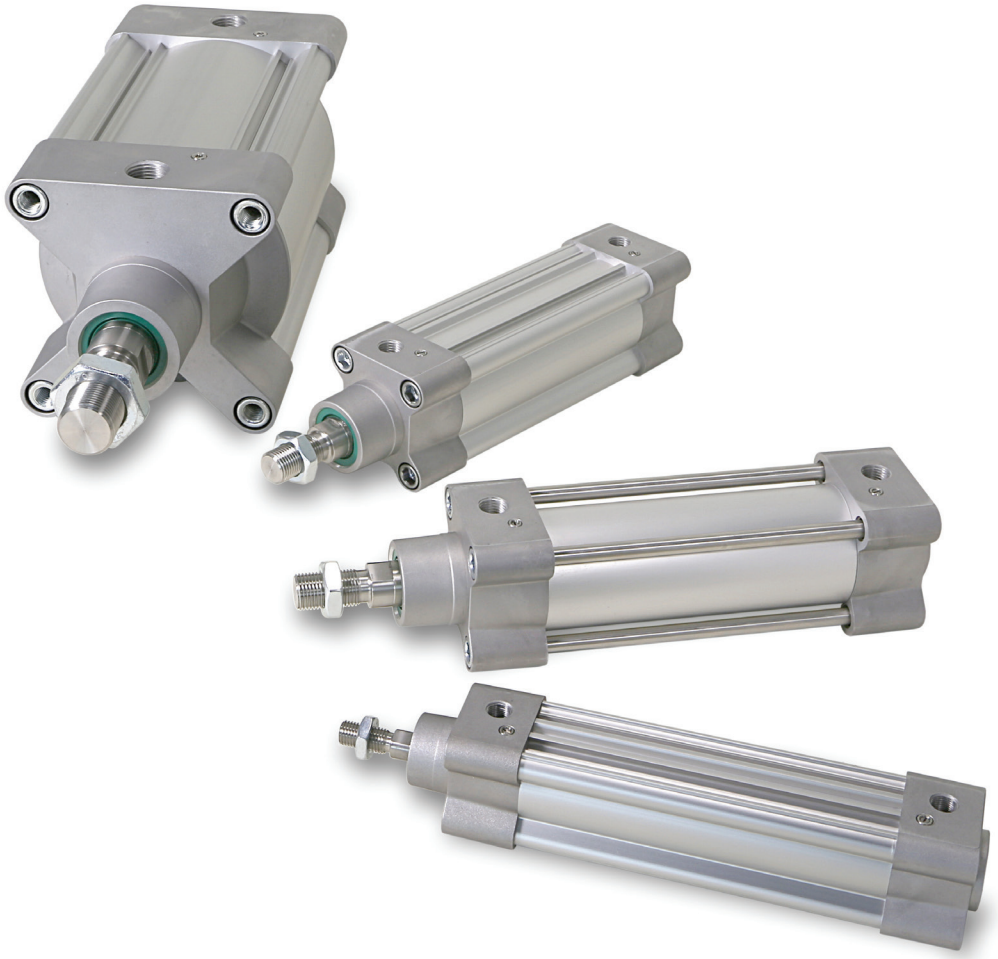

P1F Pneumatic Cylinders

Ø32 to Ø125mm
According to ISO 15552

Catalog 0980

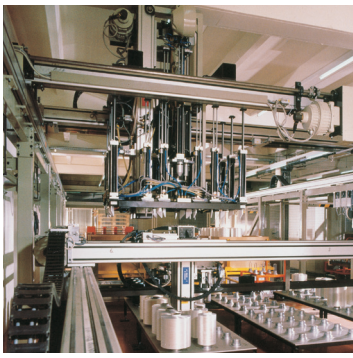

Parker

ENGINEERING YOUR SUCCESS.

Features - Product Overview 3-4
Ordering Information 5
Technical Data 6-7
Size and Selection Guide 8-11
Dimensions 12-15
Accessories 16-24
Sensors 25-28
Seal Kits 29
Air Quality Specification 30
Offer of Sale 31

⚠ WARNING

FAILURE OR IMPROPER SELECTION OR IMPROPER USE OF THE PRODUCTS AND/OR SYSTEMS DESCRIBED HEREIN OR RELATED ITEMS CAN CAUSE DEATH, PERSONAL INJURY AND PROPERTY DAMAGE.

This document and other information from Parker Hannifin Corporation, its subsidiaries and authorized distributors provide product and/or system options for further investigation by users having technical expertise. It is important that you analyze all aspects of your application including consequences of any failure, and review the information concerning the product or system in the current product catalog. Due to the variety of operating conditions and applications for these products or systems, the user, through its own analysis and testing, is solely responsible for making the final selection of the products and systems and assuring that all performance, safety and warning requirements of the application are met.

The products described herein, including without limitation, product features, specifications, designs, availability and pricing, are subject to change by Parker Hannifin Corporation and its subsidiaries at any time without notice.

Offer of Sale

The items described in this document are hereby offered for sale by Parker Hannifin Corporation, its subsidiaries or its authorized distributors. This offer and its acceptance are governed by the provisions stated on the separate page of this document entitled “Offer of Sale”.

© Copyright 2025, 2019 Parker Hannifin Corporation. All Rights Reserved

Standard Cylinders ISO 15552

Global product range

The P1F Series meets the specifications of the ISO 15552 standard. This means full interchangeability to any ISO cylinder anywhere around the globe. P1F will be available throughout the extensive worldwide Parker Hannifin organization.

Features

- Smooth profile or tie-rods design
- Bore sizes 32 - 125 mm
- Corrosion resistant design with end plates and barrel in sandblast and anodized aluminum
- Magnetic piston standard
- Polyurethane seal technology inside
- Cushioning stainless steel screws on same side
- New adjustable pneumatic and mechanical cushioning system reduces the noise caused by the impact of the piston on the end covers (standard)
- Full range of mountings available
- Full range of 'drop-in' sensors available

Design Variants

Smooth profile - P1F-S, P1F-K

The P1F in bore sizes Ø32 to Ø125 mm is a smooth profile designed cylinder with a magnetic piston used for standard temperature range from -20°C to +80°C. Utilizing internal composite technology to save weight and reduce impact kinetic energy, while assuring the high performance and functionality expected for an ISO cylinder. Aluminum end covers, carbon steel piston rod guided with a PTFE coated steel bearing, pneumatic cushioning and polyurethane (PUR) seals as standard, this is our smooth profile industrial ISO cylinder.

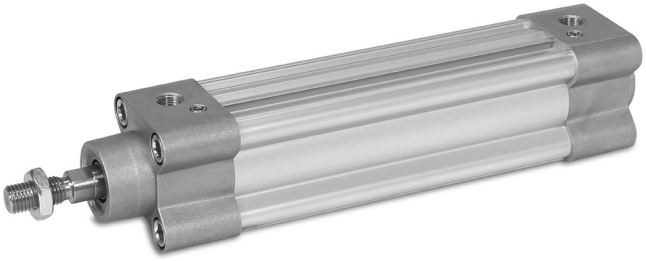

www.parker.com/pdn/P1F-S

Smooth profile - P1F-A

Similar to the smooth profile version but in an ATEX variant and a restricted temperature range from -20°C to +60°C. Average speed up to 0.5 m/s and max. frequency 1Hz.

CE Ex II 2GD Ex h IIC T4 T=120°C GDb –20°C≤Ta≤+60°C

Tie-Rods round profile - P1F-T, P1F-N

Similar to the smooth profile version but in a Tie-Rods design for heavy duty applications. Round tube is made in anodized aluminum; Tie-Rods in stainless steel as a standard.

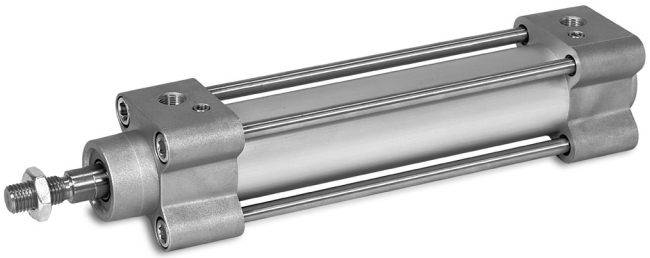

www.parker.com/pdn/P1F-T

Smooth profile with rod locks - P1F-L

The rod lock incorporates a powerful piston rod locking device, which clamps the piston rod and locks it in position. The lock is spring activated and engages when air pressure is lost. The lock is integrated into the front (head) cover of the cylinder.

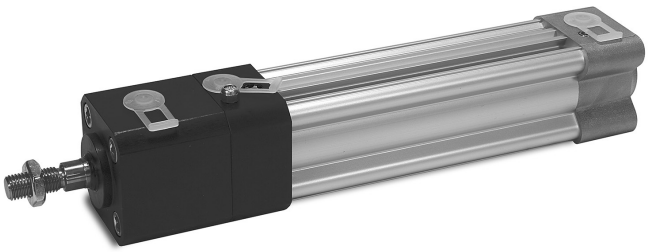

www.parker.com/pdn/P1F-L

Air Reservoirs - P1F-P

Air reservoirs are produced by a cylinder tube and two standard rear end plates and used, e.g. together with throttle valves to achieve a timer function in a pneumatic system. The delay of time will be varied by changing the throttle valve and by the size of the air reservoir. With a well functioning throttle valve and a suitable air reservoir it would be possible to achieve an accuracy of ± 5%. The reservoir is also used to equal pressure variants into system and to handling short extreme air consumptions without functional disorders. The air reservoirs could also be used together with check valves in order to retain a pressure which is essential for safety reasons.

Options

High temperature option

All seals in the high temperature version of P1F are developed and validated for continuous operation up to +150˚C. The combination of the seal geometry and the FKM (fluoro elastomers) material ensures reliable and long service life. High temperature cylinders have no magnetic piston and cannot be fitted with sensors (the magnetic field strength in high temperatures is too low to ensure correct reliable sensor function).

Low temperature option

All seals in the low temperature version of P1F are developed and validated for continuous operation down to -40˚C. Ultrathan polyurethane TPU-PUR seal technology and specifically formulated grease support performance and reliability for low temperature applications. As standard supplied with a magnetic ring in the piston for proximity sensing.

Metallic scraper option

In environments where the piston rod may be coated with resin, ice, cement, sugar crystals, dough, etc., primarily in timber handling, refrigerated/chilled transport, cement industry, chemicals and food and drinks a metal scraper in combination with a hard-chromium plated piston rod is the right solution. Available for low temperature range applications from -30˚C to +80˚C.

Ordering Information

P1F - S 032 M C - 0160 - 0000

Series	
P1F	Global ISO

Profile/Cylinder Design	
S	Smooth
K	Smooth with through rod
L	Smooth with dynamic rod lock [1, 3]
T	Tie-Rods
N	Tie-Rods with through rod
P	Air reservoir [1]

Cylinder Bore Size	
032	32mm
040	40mm
050	50mm
063	63mm
080	80mm
100	100mm
125	125mm

Temperature Range	
M	Polyurethane (PUR) -20°C to +80°C std temp
F	Fluoro elastomere (FKM) -10°C to +150°C high temp [2]
L	Ultrathan polyurethane (TPU-PUR) -40°C to +80°C low temp [2]
Q	(TPU-PUR) with metallic scraper -30°C to +80°C low temp [3]

Piston Rod Material Male Thread	
C	Chrome plated carbon steel
R	Chrome plated stainless steel (17-4)
Piston Rod Material Female Thread	
F	Chrome plated carbon steel
G	Chrome plated stainless steel (17-4)
Air Reservoir	
A	Without piston rod

Piston Style	
-	Standard with magnet [4]
F	Standard w/o magnet
X	Aluminum with magnet
A	Aluminum w/o magnet

Cylinder Stroke	
....	Stroke length in mm (max. 2000)

Rod Extension or Trunnion Mounting	
0000	Without
P . . .	Piston rod extension in mm
G000	Trunnion mount +90° vs. air ports
7000	Trunnion mount +0° vs. air ports
H . . .	Piston rod extension in mm with trunnion +90°
8 . . .	Piston rod extension in mm with trunnion +0°
3 . . .	Special rod end

1) In standard temperature range -20°C to +80°C
2) High and low temp option only with aluminum piston
3) Only in combination with chrome or stainless steel plated piston rod material
4) For air reservoir

Standard strokes for all P1F cylinders compliant to ISO 4393

(with the exception of stroke 40 mm)
Non standard strokes up to 2000 mm.

P1F Cylinders in Stock, Cushions and Magnetic Piston Included

Stroke (mm)	32 mm Bore	40 mm Bore	50 mm Bore	63 mm Bore	80 mm Bore
25	P1F-S032MC-0025-0000	P1F-S040MC-0025-0000	P1F-S050MC-0025-0000	P1F-S063MC-0025-0000	P1F-S080MC-0025-0000
40	P1F-S032MC-0040-0000	P1F-S040MC-0040-0000	P1F-S050MC-0040-0000	P1F-S063MC-0040-0000	P1F-S080MC-0040-0000
50	P1F-S032MC-0050-0000	P1F-S040MC-0050-0000	P1F-S050MC-0050-0000	P1F-S063MC-0050-0000	P1F-S080MC-0050-0000
80	P1F-S032MC-0080-0000	P1F-S040MC-0080-0000	P1F-S050MC-0080-0000	P1F-S063MC-0080-0000	P1F-S080MC-0080-0000
100	P1F-S032MC-0100-0000	P1F-S040MC-0100-0000	P1F-S050MC-0100-0000	P1F-S063MC-0100-0000	P1F-S080MC-0100-0000
125	P1F-S032MC-0125-0000	P1F-S040MC-0125-0000	P1F-S050MC-0125-0000	P1F-S063MC-0125-0000	P1F-S080MC-0125-0000
160	P1F-S032MC-0160-0000	P1F-S040MC-0160-0000	P1F-S050MC-0160-0000	P1F-S063MC-0160-0000	P1F-S080MC-0160-0000
200	P1F-S032MC-0200-0000	P1F-S040MC-0200-0000	P1F-S050MC-0200-0000	P1F-S063MC-0200-0000	P1F-S080MC-0200-0000
250	P1F-S032MC-0250-0000	P1F-S040MC-0250-0000	P1F-S050MC-0250-0000	P1F-S063MC-0250-0000	P1F-S080MC-0250-0000
320	P1F-S032MC-0320-0000	P1F-S040MC-0320-0000	P1F-S050MC-0320-0000	P1F-S063MC-0320-0000	P1F-S080MC-0320-0000
400	P1F-S032MC-0400-0000	P1F-S040MC-0400-0000	P1F-S050MC-0400-0000	P1F-S063MC-0400-0000	P1F-S080MC-0400-0000

Cylinder Forces

Bore/Piston Rod [mm]	Stroke	Surface Area [cm²]	Max theoretical force in N in relation to applied pressure in bar 1	2	3	4	5	6	7	8	9	10
32/12	+	8.0	80	161	241	322	402	483	563	643	724	804
	-	6.9	69	138	207	276	346	415	484	553	622	691
40/16	+	12.6	126	251	377	503	628	754	880	1005	1131	1257
	-	10.6	106	211	317	422	528	633	739	844	950	1056
50/20	+	19.6	196	393	589	785	982	1178	1374	1571	1767	1964
	-	16.5	165	330	495	660	825	990	1155	1319	1484	1649
63/20	+	31.2	312	623	935	1247	1559	1870	2182	2494	2806	3117
	-	28.0	280	561	841	1121	1402	1682	1962	2242	2523	2803
80/25	+	50.3	503	1005	1508	2011	2513	3016	3519	4021	4524	5027
	-	45.4	454	907	1361	1814	2268	2721	3175	3629	4082	4536
100/25	+	78.5	785	1571	2356	3142	3927	4712	5498	6283	7069	7854
	-	73.6	736	1473	2209	2945	3682	4418	5154	5891	6627	7363
125/32	+	122.7	1227	2454	3682	4909	6136	7363	8590	9818	11045	12272
	-	114.7	1147	2294	3440	4587	5734	6881	8027	9174	10321	11468

+ = outward stroke
- = return stroke

Cylinder Air Consumption

Bore/Piston Rod [mm]	Stroke	Surface Area [cm²]	Air consumption in l/mm in relation to applied pressure in bar 1	2	3	4	5	6	7	8	9	10
32/12 (G1/8)	+	8.0	0.016	0.024	0.032	0.040	0.048	0.056	0.064	0.072	0.079	0.087
	-	6.9	0.014	0.021	0.027	0.034	0.041	0.048	0.055	0.061	0.068	0.075
40/16 (G1/4)	+	12.6	0.025	0.037	0.050	0.062	0.075	0.087	0.099	0.112	0.124	0.137
	-	10.6	0.021	0.031	0.042	0.052	0.063	0.073	0.083	0.094	0.104	0.115
50/20 (G1/4)	+	19.6	0.039	0.058	0.078	0.097	0.117	0.136	0.155	0.175	0.194	0.213
	-	16.5	0.033	0.049	0.065	0.082	0.098	0.114	0.130	0.147	0.163	0.179
63/20 (G3/8)	+	31.2	0.062	0.093	0.123	0.154	0.185	0.216	0.247	0.277	0.308	0.339
	-	28.0	0.056	0.083	0.111	0.139	0.166	0.194	0.222	0.249	0.277	0.305
80/25 (G3/8)	+	50.3	0.100	0.150	0.199	0.249	0.298	0.348	0.398	0.447	0.497	0.546
	-	45.4	0.090	0.135	0.180	0.224	0.269	0.314	0.359	0.404	0.448	0.493
100/25 (G1/2)	+	78.5	0.156	0.234	0.311	0.389	0.466	0.544	0.621	0.699	0.776	0.854
	-	73.6	0.146	0.219	0.292	0.364	0.437	0.510	0.582	0.655	0.728	0.800
125/32 (G1/2)	+	122.7	0.244	0.365	0.486	0.607	0.728	0.850	0.971	1.092	1.213	1.334
	-	114.7	0.228	0.341	0.454	0.567	0.681	0.794	0.907	1.020	1.134	1.247

+ extending, - retracting

free air consumption for 1 cycle, 10 mm inward and 10 mm outward

Weight

Bore Size mm	P1F-S/A/L/H Base 0 mm kg	P1F-S/A/L/H per 100 mm kg	P1F-T Base 0 mm kg	P1F-T per 100 mm kg	Moving Parts Base 0 mm kg	Moving Parts per 100 mm kg	Adder for Rod Lock P1F-H kg	Adder for Rod Lock P1F-L kg
32	0.54	0.23	0.49	0.27	0.10	0.09	0.6	0.27
40	0.74	0.32	0.73	0.31	0.19	0.16	0.8	0.38
50	1.22	0.47	1.19	0.52	0.34	0.25	1.0	0.59
63	1.69	0.49	1.68	0.54	0.40	0.24	1.2	1.15
80	2.50	0.73	2.48	0.84	0.73	0.39	1.4	2.14
100	3.65	0.80	3.66	0.88	1.02	0.38	1.6	3.70
125	6.41	1.37	6.30	1.32	2.01	0.63	1.8	5.76

Product type	Standard cylinder according to ISO 15552
Bore size	32 - 125 mm
Stroke length	5 - 2000 mm
Versions	Double acting
Cushioning	Adjustable air cushioning
Position sensing	Proximity sensor
Installation	ISO cylinder and piston rod mountings

Operating and environmental data

Operating medium	For best possible service life and trouble-free operation dry filtered compressed air to ISO 8573-1:2010 quality 3.4.3 should be used. This specifies a dew point of + 3°C for indoor operation (a lower dew point should be selected for minus temperature operation and we recommend the use of an inline dryer) and is in line with the air quality from most standard compressors with a standard filter.			
Operating pressure	1 to 10 bar			
Ambient temperature	Standard temperature (option M):	-20°C to +80°C	Metal scraper (option Q):	-30°C to +80°C
	High temperature (option F):	-10°C to +150°C	FKM wiper rod seal (option V):	-10°C to +80°C
	Low temperature (option L):	-40°C to + 80°C	POLON wiper rod seal (option D):	-20°C to +80°C
Pre-lubricated	Further lubrication is normally not necessary. If additional lubrication is introduced it must be continued. Hydraulic oil type HLP (DIN 51524. ISO 11158). Viscosity by 40°C: 32 mm2/s (cst). Example: Shell Tellus 32 or equal.			
Corrosion resistance	Material and surface treatment selected for typical industrial applications with resistance to corrosion and chemicals.			

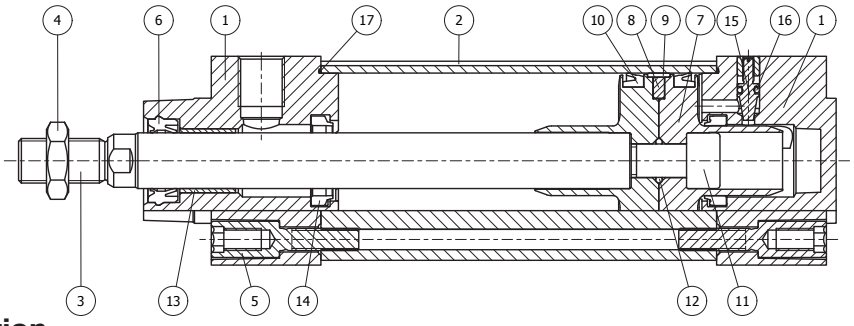

Material specification

Pos	Part		Specification
1	End covers		Aluminum / Optional black anodized (options V & D only)
2	Cylinder barrel		Anodized aluminum (profile or round tube)
3	Piston rod	Standard	Chrome plated carbon steel
		Optional	Chrome plated stainless steel (17-4)
4	Piston rod nut		Zinc plated steel / Stainless steel (option V & D only)
5	End cover screws		Zinc plated steel / Stainless steel (option V & D only)
6	Piston rod seal	Standard	Polyurethane (PUR)
		Optional	Fluoro elastomer (FKM) / Ultrathanpolyurethane (TPU-PUR) / Metallic scraper (Brass) nitrile (NBR) / Polon / UHMW-PE
7	Piston	Standard	Poloxymethylene (POM)
		Optional	Aluminum
8	Magnet		Plastic coated magnetic material
9	Piston bearing	Standard	Poloxymethylene (POM)
		Optional	Polytetrafluoroethylene (PTFE)
10	Piston seals	Standard	Polyurethane (PUR)
		Optional	Fluoro elastomer (FKM) / Ultrathanpolyurethane (TPU-PUR)
11	Piston bolt		Zinc plated steel
12	O-ring piston bolt	Standard	Nitrile rubber (NBR)
		Optional	Fluoro elastomer (FKM)
13	Piston rod bearing		Multilayer steel / PTFE / Optional high polymer (option V & D only)
14	Cushioning seals	Standard	Polyurethane (PUR)
		Optional	Fluoro elastomer (FKM) / Ultrathanpolyurethane (TPU-PUR)
15	Cushioning screw		Stainless steel DIN X8 CrNiS 18-9
16	O-ring cushioning	Standard	Nitrile rubber (NBR)
	screw	Optional	Fluoro elastomer (FKM)
17	O-ring end cover	Standard	Nitrile rubber (NBR)
		Optional	Fluoro elastomer (FKM)
	Tie-Rods		Austenitic stainless steel, DIN X8 CrNiS 18-9
	Tie-Rods nut		Zinc plated steel

Guide for selecting suitable tubing

The selection of the correct size of tubing is often based on experience, with no great thought to optimizing energy efficiency and cylinder velocity. This is usually acceptable, but making a rough calculation can result in worthwhile economic gains.

The following is the basic principle:

1. The primary line to the working valve could be over sized (this does not cause any extra air consumption and consequently does not create any extra costs in operation).
2. The tubes between the valve and the cylinder should, however, be optimized according to the principle that an insufficient bore throttles the flow and thus limits the cylinder speed, while an oversized pipe creates a dead volume which increases the air consumption and filling time.

The following prerequisites apply

The cylinder load should be about 50 % of the theoretical force (= normal load). A lower load gives a higher velocity and vice versa. The tube size is selected as a function of the cylinder bore, the desired cylinder velocity and the tube length between the valve and the cylinder. If you want to use the capacity of the valve to its maximum, and obtain maximum speed, the tubing should be chosen so that they at least correspond with the equivalent restriction diameter (see description below), so that the tubing does not restrict the total flow. This means that a short tubing must have at least the equivalent restriction diameter. If the tubing is longer, choose it from the table below. Straight fittings should be chosen highest flow rates. Rates as elbow and banjo fittings cause restriction.

The chart below is intended to help when selecting the correct size of tube to use between the valve and the cylinder.

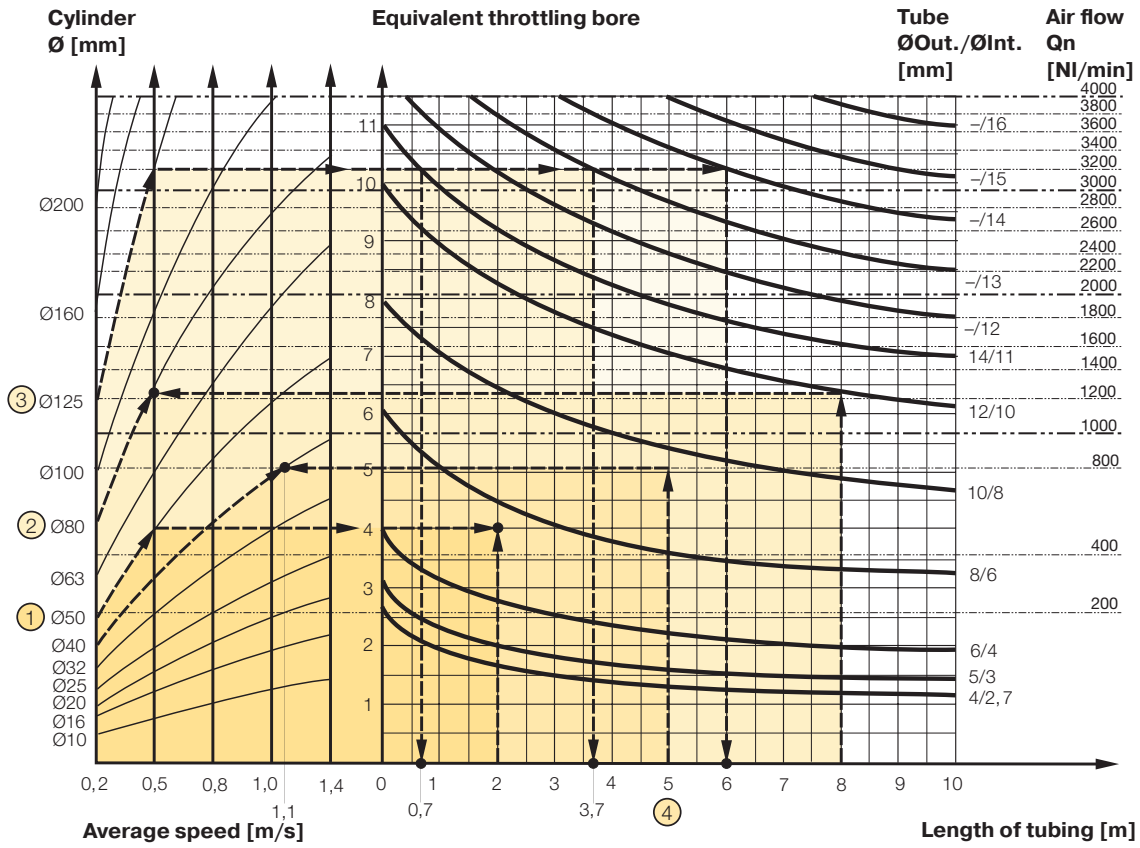

The equivalent throttling bore is a long throttle (for example a tube) or a series of throttles (for example, through a valve) converted to a short throttle which gives a corresponding flow rate. This should not be confused with the orifice which is sometimes specified for valves. The value for the orifice does not normally take account of the fact that the valve contains a number of throttles.

Qn is a measure of the valve flow capacity, with flow measured in liter per minute (l/min) at 6 bar(e) supply pressure and 1 bar pressure drop across the valve.

Example ① :
Which tube diameter should be used?

A 50 mm bore cylinder is to be operated at 0.5 m/s. The tube length between the valve and cylinder is 2 m. In the diagram we follow the line from 50 mm bore to 0.5 m/s and get an "equivalent throttling bore" of approximately 4 mm. We continue out to the right in the chart and intersect the line for a 2 m tube between the curves for 4 mm (6/4 tube) and 6 mm (8/6 tube). This means that a 6/4 tube throttles the velocity somewhat, while an 8/6 tube is a little too large. We select the 8/6 tube to obtain full cylinder velocity.

Example ② :
What cylinder velocity will be obtained?

A 80 mm bore cylinder will be used, connected by 8 m 12/10 tube to a valve with Qn 1200 Nl/min. What cylinder velocity will we get? We refer to the diagram and follow the line from 8 mm tube length up to the curve for 12/10 tube. From there, we go horizontally to the curve for the Ø80 cylinder. We find that the velocity will be about 0.5 m/s.

Example ③ :
What is the minimum inner diameter and maximum length of tube?

For a application a 125 mm bore cylinder will be used. Maximum velocity of piston rod is 0.5 m/s. The cylinder will be controlled by a valve with Qn 3200 Nl/min. What diameter of tube can be used and what is maximum length of tube.

We refer to the diagram. We start at the left side of the diagram cylinder Ø125. We follow the line until the intersection with the velocity line of 0.5 m/s. From here we draw a horizontal line in the diagram. This line shows us we need an equivalent throttling bore of approximately 10 mm.

Following this line horizontally we cross a few intersections. These intersections shows us the minimum inner diameter (right side diagram) in combination with the maximum length of tube (bottom side diagram).

For example:

Intersection one: When a tube (14/11) will be used, the maximum length of tube is 0.7 meter.

Intersection two: When a tube (—/13) will be used, the maximum length of tube is 3.7 meter.

Intersection three: When a tube (—/14) will be used, the maximum length of tube is 6 meter.

Example ④ : Determining tube size and cylinder velocity with a particular cylinder and valve?

For an application using a 40 mm bore cylinder with a valve with Qn=800 Nl/min. The distance between the cylinder and valve has been set to 5 m.

Tube dimension: What tube bore should be selected to obtain the maximum cylinder velocity? Start at pipe length 5 m, follow the line up to the intersection with 800 Nl/min. Select the next largest tube diameter, in this case Ø10/8 mm.

Cylinder velocity: What maximum cylinder velocity will be obtained? Follow the line for 800 Nl/min to the left until it intersects with the line for the Ø40 mm cylinder. In this example, the speed is just above 1.1 m/s.

Cushioning Diagram

Work out your expected moving mass and read off the maximum permissible speed at start of cushioning Alternatively, take your desired speed and expected mass and find the cylinder size required.

Please note that piston speed at start of cushioning is typically approx. 50 % higher than the average speed, and that it is this higher speed which determines the choice of cylinder.

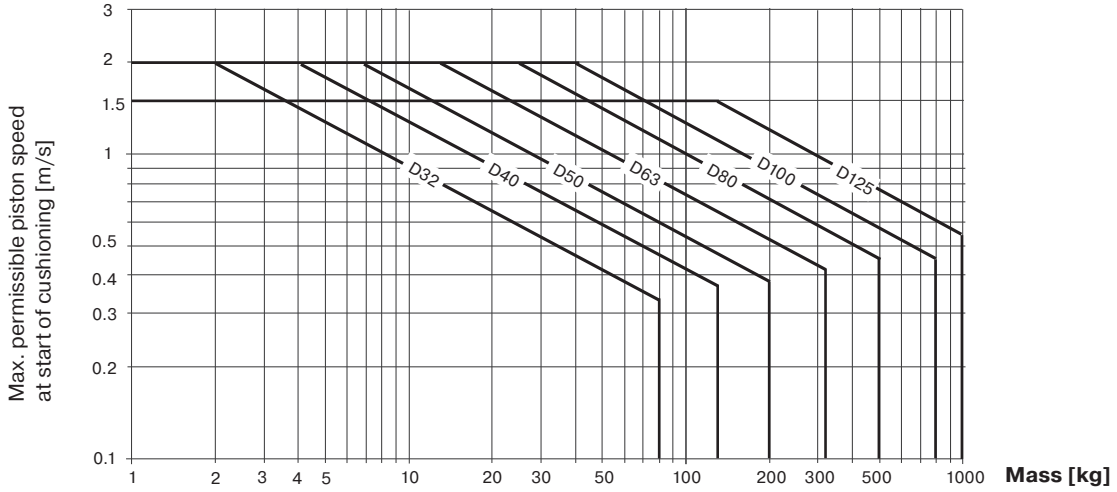

Horizontal application, pressure p = 6 bar, mass guided externally

Cylinder with Rod Lock

Function on pressure loss

The piston rod lock can be used in all material handling systems where controlled fastening or positioning is required. Additional measures are required for use in safety-related applications (refer to EC Machinery Directive).

The piston rod cylinder with brakes is suitable for use in safety-related sections of control systems. The piston rod lock is also suitable for use as a pressure-loss brake for cylinders with suspended loads, for example. Piston rod can be held in position for long periods even with alternating loads, fluctuating operating pressure or leaks in the system. The signal air to the lock unit can be connected directly to the air system or to the supply air for the valve controlling the cylinder in question. For controlled on/off operation of the lock unit, a separate valve, with large exhaust flow capacity, is used.

Clean and compact design

The front end piece and lock unit form an integrated block, keeping the length of the structure short. The design is easy to clean, sealed and waterproof. The exhaust air from the lock unit can be removed by replacing the filter unit with a connector and hose. This is an advantage in terms of cleaning or when environmental factors are important.

Material specification, piston rod locking

	Dynamic Rod Lock Unit
Housing	Anodized aluminum
Carriage	-
Lock collars	Hardened steel
Springs	Stainless steel
Bore sizes 32-40 mm	UHMWPE plastic
Bore sizes 50-125 mm	Polyurethane PUR
O Rings	Nitrile rubber NBR
Scraper ring	Polyurethane PUR
Air filter	Brass / Sintered bronze

Note!
If a rod guidance module is to be fitted to the brake and the cylinder, as the piston rod extension (WH dimension) is not in accordance with the ISO standard, the piston rod must be extended to provide the same WH dimension as for the cylinder itself.

Cylinder piston rod material must be made in steel or stainless steel chromium plated.

Technical data

Working pressure:	Max 7 bar
Working media:	Dry filtered compressed air
Working temperature:	-20 to +80°C
Release pressure 1):	Min 3.4 bar

1) Signal pressure to inlet port of lock unit

Static lock forces

Cylinder bore [mm]	Lock force [N] dyn. rod lock
Ø32	664
Ø40	1007
Ø50	1844
Ø63	2763
Ø80	4626
Ø100	7024
Ø125	9500

Locking and braking

The static locking force corresponds to 7 bar pressure. Under certain circumstances, the lock can also be used as a brake for positioning or similar applications. The maximum values set out in the graph must not be exceeded.

Use as a brake

The table shows the maximum values for speed and braking mass if the cylinder is used as a brake. The cylinder should not be exposed to additional compressive forces as this significantly reduces the external mass that can be braked. The cylinder does not act as a motor during braking. Heat is generated if the brake is used frequently, and this must be taken into account too.

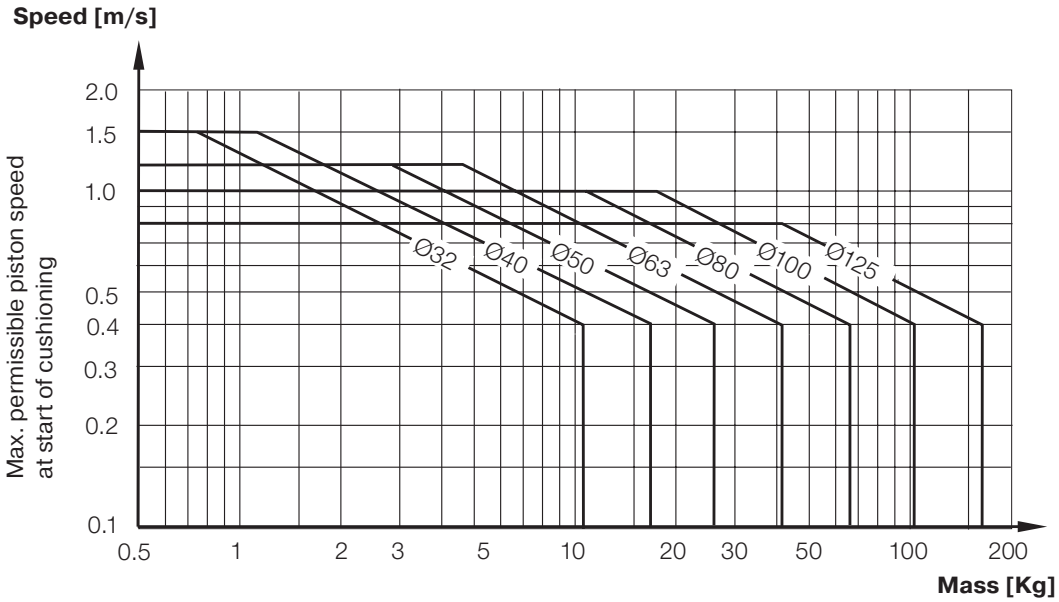

Cushioning Characteristics

Air cushion is used to absorb kinetic energy due to load and speed at both end of stroke. This typically consists of a threaded needle screw that adjusts into an orifice in the cylinder end plate. By adjusting the screw further into the orifice you lessen the amount of air that can escape in a given time. Slowing the exhaust of air creates back pressure which slows the piston as it enters into the end cushioning seal.

The graph is valid for an horizontal movement and the pressure of 6 bar.

The mass is the sum of internal and external friction, plus any gravitational forces. Work out your expected moving mass and read off the maximum permissible speed at start of cushioning. Alternatively, take your desired speed and expected mass and find the cylinder bore size required.

Please note that piston speed at start of cushioning is typically approx. 50 % higher than the average speed and that it is this higher speed which determines the choice of cylinder.

Smooth profile design

P1F-S / P1F-A

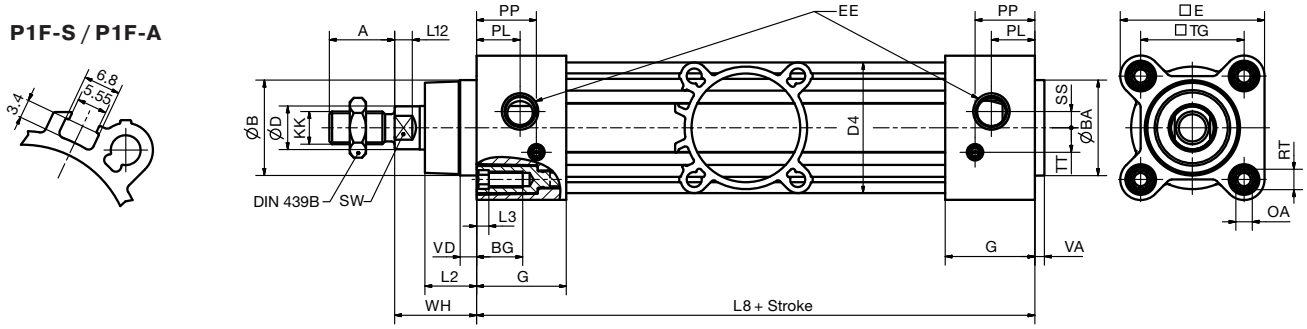

P1F-K

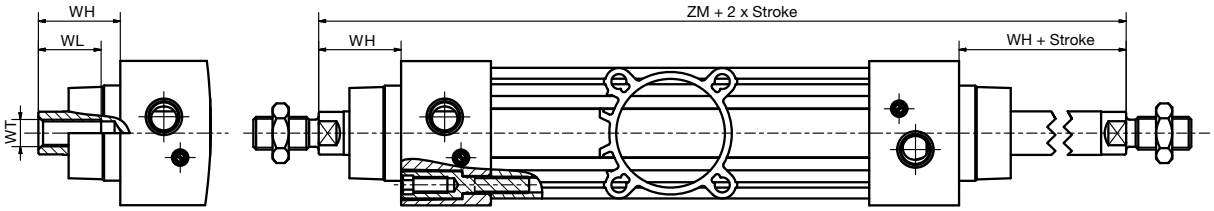

Tie-Rods with round profile design

P1F-T

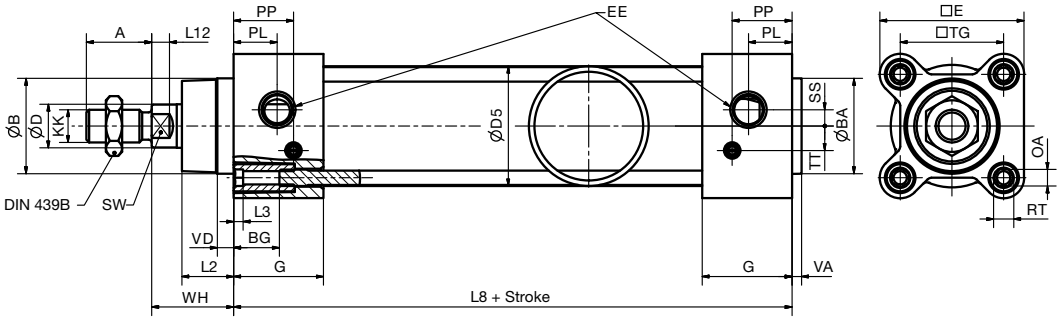

P1F-N

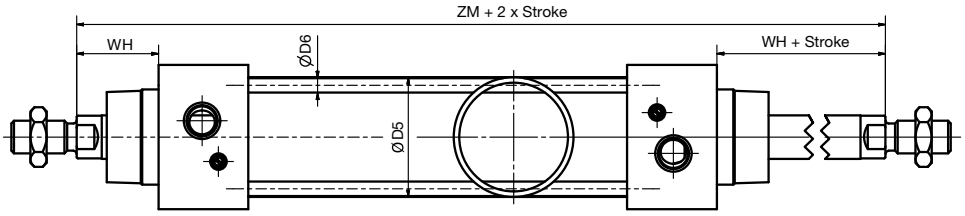

Female piston rod option

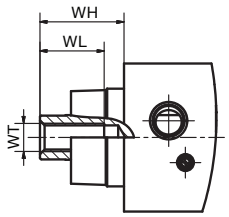

Air reservoir with smooth profile design

P1F-P

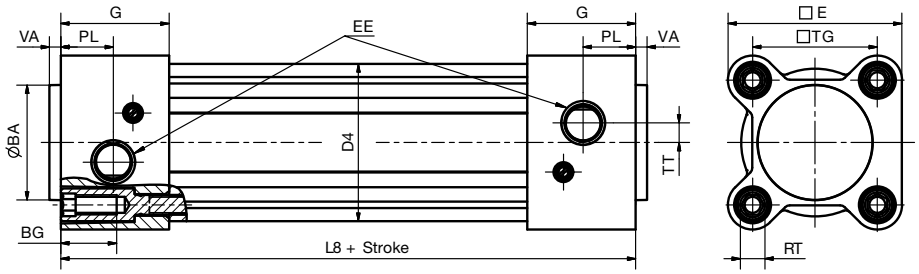

Important
Pressure Equipment Directive. According (PED) to the directive 2014/68/EU, for uncertified pressure vessels:
Max Working pressure x Volume maximized to 50 Bar x liter, i.e. max 10 bar and 5 liter volume.
In accordance we therefore maximized the volume to max 5 liter cylinder.

P1F-S, P1F-A, P1F-K, P1F-T, P1F-N, P1F-P [mm]

Bore Size	A	ØB d11	ØBA d11	BG	ØD	D4	ØD5	ØD6	E	EE	G	KK	L2	L3	L8
32	22	30	30	17	12	42.5	35	5.3	47	G1/8	28.4	M10x1.25	16.8	4.5	94
40	24	35	35	17	16	48	43	5.3	53	G1/4	33	M12x1.25	19	4.5	105
50	32	40	40	18	20	59.5	54	7.1	64.5	G1/4	33.4	M16x1.5	27.6	4.5	106
63	32	45	45	18	20	69.5	67	7.1	75	G3/8	39.4	M16x1.5	24.3	4.5	121
80	40	45	45	19.5	25	86	85	8.9	94	G3/8	39.4	M20x1.5	30.1	5.5	128
100	40	55	55	19.5	25	103	105	8.9	111	G1/2	44.3	M20x1.5	34	5.5	138
125	54	60	60	20	32	130	130	10.8	136	G1/2	50.8	M27x2	45	0	160

Bore Size	L12	OA	PL	PP	RT	SS	SW	TG	TT	VA	VD	WH	WL	WT	ZM
32	6	6	14	20	M6	5	10	32.5	6.5	3.6	6	26	21	M8x1	146
40	6.5	6	16	22	M6	6	13	38	9	3.5	6	30	23	M10x1.25	165
50	8	8	15.5	21.5	M8	6	17	46.5	9	3.6	6	37	31	M14x1.5	180
63	8	8	18	28	M8	10	17	56.5	11	3.5	6	37	31	M14x1.5	195
80	10	10	20	30	M10	11.5	22	72	14	3.5	6	46	39	M18x1.5	220
100	10	10	18	33	M10	11.5	22	89	14	3.5	6	51	39	M18x1.5	240
125	13	8	20	40	M12	0	27	110	22	5.5	9	65	53	M24x2	290

Tolerances [mm]

Bore Size	A	L8	TG	ZM	Stroke Tolerance s ⩽ 350 mm	350 mm < s ⩽ 600 mm	s > 600 mm
32	0 / - 0.5	± 0.3	± 0.4	-0.4 /+ 2.2	+ 1.7	+ 1.9	+ 2.3
40	0 / - 0.5	± 0.3	± 0.4	-0.4 /+ 2.2	+ 1.7	+ 1.9	+ 2.3
50	0 / - 0.5	± 0.4	± 0.4	-0.4 /+ 2.2	+ 1.8	+ 2	+ 2.4
63	0 / - 0.5	- 0.5 / + 0.3	± 0.4	-0.4 /+ 2.2	+ 1.9	+ 2.1	+ 2.5
80	0 / - 0.5	± 0.4	± 0.4	-0.4 /+ 2.2	+ 1.9	+ 2.1	+ 2.5
100	0 / - 0.5	± 0.5	± 0.4	-0 /+ 2.5	+ 2.0	+ 2.2	+ 2.6
125	0 / - 1.0	± 0.5	± 0.4	-0 /+ 2.6	+ 2.1	+ 2.3	+ 2.7

P1F-P

Bore Size Ø	Air Volume Base 0 mm [cm³]	Air Volume per Stroke of [cm³/100 mm]
32	40	80
40	68	126
50	91	196
63	137	312
80	289	503
100	417	785
125	809	1227

Dynamic rod lock with smooth profile design

P1F-L-V2

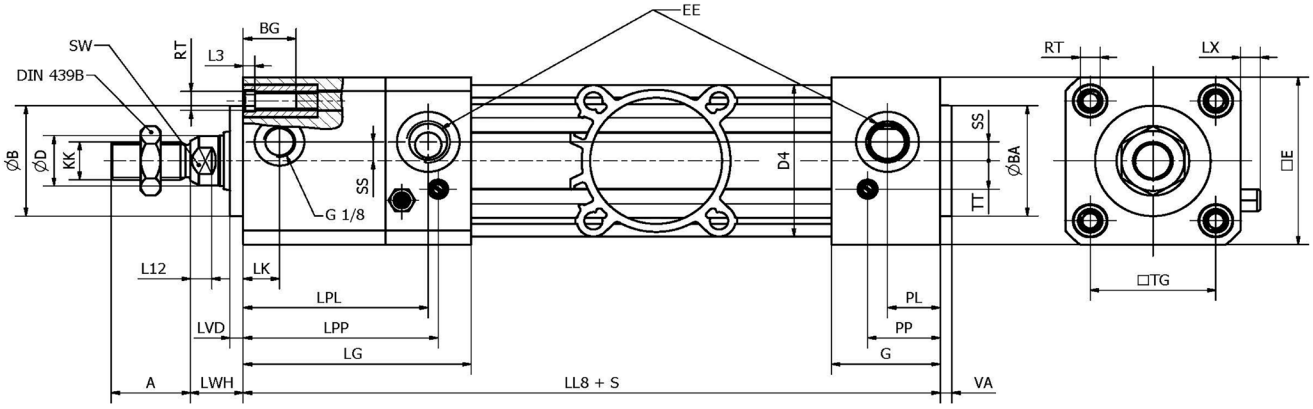

* Not ISO

P1F-L [mm]

Bore Size	A	ØB d11	ØBA d11	BG	ØD	D4	E	EE	G	KK	L3	L8	L12	PL	PP	RT
32	22	30	30	16	12	42.5	47	G1/8	28.4	M10x1.25	4.5	94	6	14	20	M6
40	24	35	35	16	16	48	53	G1/4	33	M12x1.25	4.5	105	6.5	16	22	M6
50	32	40	40	16	20	59.5	64.5	G1/4	33.4	M16x1.5	4.5	106	8	15.5	21.5	M8
63	32	45	45	16	20	69.5	75	G3/8	39.4	M16x1.5	4.5	121	8	18	28	M8
80	40	45	45	17	25	86	94	G3/8	39.4	M20x1.5	5.5	128	10	20	30	M10
100	40	55	55	17	25	103	111	G1/2	44.3	M20x1.5	5.5	138	10	18	33	M10
125	54	60	60	20	32	130	136	G1/2	50.8	M27x2	0	160	13	20	40	M12

Bore Size	SS	SW	TG	TT	VA	LG	LK	LL8	LPL	LPP	LVD	LWH	LX
32	5	10	32.5	6.5	3.6	66.4	10	132	52	58	4	15	6
40	6	13	38	9	3.5	69	11	141	56	59	4	16	6
50	6	17	46.5	9	3.6	73.3	9	146	57	65	4	17	7
63	10	17	56.5	11	3.5	87.6	28	169	71	80	4	17	7
80	11.5	22	72	14	3.5	102.4	27	191	85	95	4	20	7
100	11.5	22	89	14	3.5	125.3	54	219	103	116	4	20	7
125	0	27	110	22	5.5	132.8	59	242	111	124	6	27	7

Tolerances [mm]

Bore Size	A	L8	TG	Stroke Tolerance s ⩽ 350 mm	350 mm < s ⩽ 600 mm	s > 600 mm
32	0/-0.5	± 0.3	±0.4	+ 1.7	+ 1.9	+ 2.3
40	0/-0.5	± 0.3	±0.4	+ 1.7	+ 1.9	+ 2.3
50	0/-0.5	- 0.3 / + 0.5	±0.4	+ 1.8	+ 2	+ 2.4
63	0/-0.5	- 0.6 / + 0.2	±0.4	+ 1.9	+ 2.1	+ 2.5
80	0/-0.5	± 0.4	±0.4	+ 1.9	+ 2.1	+ 2.5
100	0/-0.5	± 0.5	±0.4	+ 2.0	+ 2.2	+ 2.6
125	0/-1.0	± 0.5	±0.4	+ 2.1	+ 2.3	+ 2.7

Mountings

Bore Size mm	Flange (1) MF1 / MF2	Foot brackets (2) MS1	Pivot bracket with (3) rigid bearing AB7	Swivel eye bracket (4) MP6	Clevis bracket (5) MP2
32	P1C-4KMB	P1C-4KMF	P1C-4KMDB	P1C-4KMSB	P1C-4KMTB
40	P1C-4LMB	P1C-4LMF	P1C-4LMDB	P1C-4LMSB	P1C-4LMTB
50	P1C-4MMB	P1C-4MMF	P1C-4MMDB	P1C-4MMSB	P1C-4MMTB
63	P1C-4NMB	P1C-4NMF	P1C-4NMDB	P1C-4NMSB	P1C-4NMTB
80	P1C-4PMB	P1C-4PMF	P1C-4PMDB	P1C-4PMSB	P1C-4PMTB
100	P1C-4QMB	P1C-4QMF	P1C-4QMDB	P1C-4QMSB	P1C-4QMTB
125	P1C-4RMB	P1C-4RMF	P1C-4RMDB	P1C-4RMSB	P1C-4RMTB

Bore Size mm	Clevis bracket (6) MP4	Clevis bracket (7) AB6	Pivot bracket with (8) swivel bearing CS7	3 and 4 position (9) flange JP1	Pivot brackets (10) AT4
32	P1C-4KMEB	P1C-4KMCB	P1C-4KMAF	P1E-6KB0	9301054261
40	P1C-4LMEB	P1C-4LMCB	P1C-4LMAF	P1E-6LB0	9301054262
50	P1C-4MMEB	P1C-4MMCB	P1C-4MMAF	P1E-6MB0	9301054262
63	P1C-4NMEB	P1C-4NMCB	P1C-4NMAF	P1E-6NB0	9301054264
80	P1C-4PMEB	P1C-4PMCB	P1C-4PMAF	P1E-6PB0	9301054264
100	P1C-4QMEB	P1C-4QMCB	P1C-4QMAF	P1E-6QB0	9301054266
125	P1C-4RMEB	P1C-4RMCB	P1C-4RMAF	–––	9301054266

Bore Size mm	Flange trunnion (11) MT5/MT6	Intermediate trunnion (12) MT4	Swivel rod (13) eye AP6	Clevis (14) AP2 Galvanized steel	Clevis (14) AP2 Stainless steel	Flexo coupling (15) PM5
32	P1D-4KMYF	refer to page 22	P1C-4KRS	P1C-4KRC	P1S-4JRD	P1C-4KRF
40	P1D-4LMYF	refer to page 22	P1C-4LRS	P1C-4LRC	P1S-4LRD	P1C-4LRF
50	P1D-4MMYF	refer to page 22	P1C-4MRS	P1C-4MRC	P1S-4MRD	P1C-4MRF
63	P1D-4NMYF	refer to page 22	P1C-4MRS	P1C-4MRC	P1S-4MRD	P1C-4MRF
80	P1D-4PMYF	refer to page 22	P1C-4PRS	P1C-4PRC	P1S-4PRD	P1C-4PRF
100	P1D-4QMYF	refer to page 22	P1C-4PRS	P1C-4PRC	P1S-4PRD	P1C-4PRF
125	–––	refer to page 22	P1C-4RRS	P1C-4RRC	P1S-4RRD	P1C-4RRF

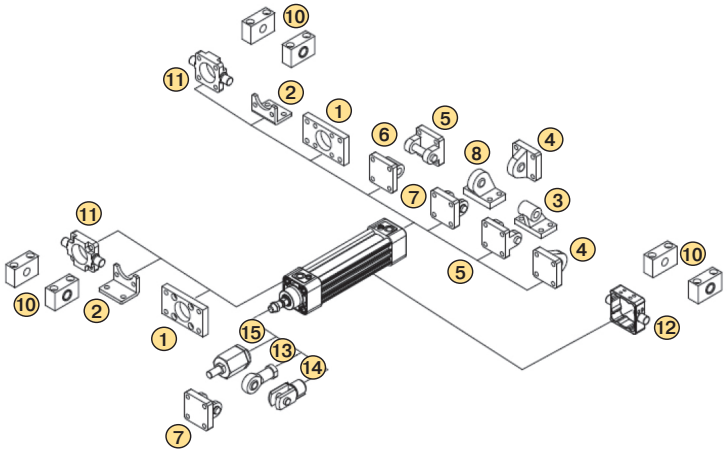

Flange - MF1 / MF2

Intended for fixed mounting of cylinder. Flange can be fitted to front or rear end cover of cylinder.

Materials:

- Flange: Surface-treated steel
- Mounting screws acc. to DIN 6912: Zinc-plated steel 8.8

Supplied complete with mounting screws for attachment to the cylinder.

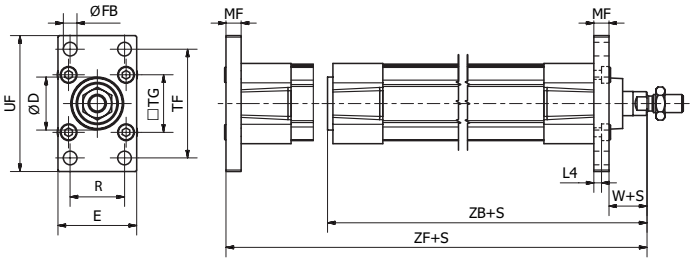

According to ISO 15552

Bore Size mm	D (H11) mm	E mm	ØFB (H13) mm	L4 mm	MF mm	R mm	TF mm	TG mm	UF mm	W* mm	ZB* mm	ZF* mm	Weight kg	Part Number
32	30	45	7	5.0	10	32	64	32.5	80	16	123.5	130	0.21	**P1C-4KMB**
40	35	52	9	5.0	10	36	72	38.0	90	20	138.5	145	0.27	**P1C-4LMB**
50	40	65	9	6.5	12	45	90	46.5	110	25	146.5	155	0.53	**P1C-4MMB**
63	45	75	9	6.5	12	50	100	56.5	120	25	161.5	170	0.66	**P1C-4NMB**
80	45	95	12	9.0	16	63	126	72.0	150	30	177.5	190	1.45	**P1C-4PMB**
100	55	115	14	9.0	16	75	150	89.0	170	35	192.5	205	1.60	**P1C-4QMB**
125	60	140	16	10.5	20	90	180	110.0	205	45	230.5	245	3.34	**P1C-4RMB**

*Does not apply to cylinders with piston rod extension or lock units.

Foot Bracket - MS1

Intended for fixed mounting of cylinder. Foot bracket can be fitted to front or rear end cover of the cylinder

Materials:

- Flange: Surface-treated steel
- Mounting screws acc. to DIN 6912: Zinc-plated steel 8.8:

Supplied complete with mounting screws for attachment to the cylinder.

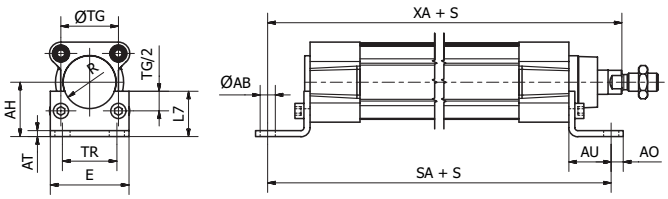

According to ISO 15552

Bore Size mm	ØAB (H14) mm	AH (JS15) mm	AO mm	AT mm	AU mm	E mm	L7 mm	R mm	SA* mm	TG mm	TR (JS14) mm	XA* mm	Weight ** kg	Part Number
32	7.0	32	11	4	24	45	30	15.0	142	32.5	32	144	0.08	**P1C-4KMF**
40	10.0	36	8	4	28	52	30	17.5	161	38.0	36	163	0.09	**P1C-4LMF**
50	10.0	45	15	5	32	65	36	20.0	170	46.5	45	175	0.18	**P1C-4MMF**
63	10.0	50	13	5	32	75	35	22.5	185	56.5	50	190	0.20	**P1C-4NMF**
80	12.0	63	14	6	41	95	47	22.5	210	72.0	63	215	0.40	**P1C-4PMF**
100	14.5	71	16	6	41	115	53	27.5	220	89.0	75	230	0.54	**P1C-4QMF**
125	16.5	90	25	8	45	140	70	30.0	250	110.0	90	270	1.10	**P1C-4RMF**

*Does not apply to cylinders with piston rod extension or lock units.

** per bracket

Pivot Bracket with Rigid Bearing - AB7

Intended for flexible mounting of cylinder. The pivot bracket can be combined with clevis bracket MP2.

Materials:

- Pivot bracket: Aluminum
- (Bush: Steel and PTFE)

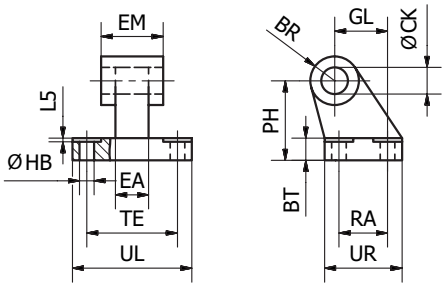

According to ISO 15552

Bore Size mm	CK mm	HB mm	L5 mm	TE mm	UL mm	GL mm	RA mm	EA mm	EM mm	UR mm	PH mm	BT mm	BR mm	Weight kg	Part Number
32	10	6.6	1.6	38	51	21	18	10	26	31	32	8	10.0	0.05	**P1C-4KMDB**
40	12	6.6	1.6	41	54	24	22	15	28	35	36	10	11.0	0.09	**P1C-4LMDB**
50	12	9.0	1.6	50	65	33	30	16	32	45	45	12	13.0	0.16	**P1C-4MMDB**
63	16	9.0	1.6	52	67	37	35	16	40	50	50	14	15.0	0.20	**P1C-4NMDB**
80	16	11.0	2.5	66	86	47	40	20	50	60	63	14	15.0	0.32	**P1C-4PMDB**
100	20	11.0	2.5	76	96	55	50	20	60	70	71	17	19.0	0.53	**P1C-4QMDB**
125	25	14.0	3.2	94	124	70	60	30	70	90	90	20	22.5	1.01	**P1C-4RMDB**

Swivel Eye Bracket - MP6

Intended for use together with clevis bracket AB6.

Materials:

- Bracket: Aluminum
- Swivel bearing acc. to DIN 648K: Hardened steel

Supplied complete with mounting screws for attachment to cylinder.

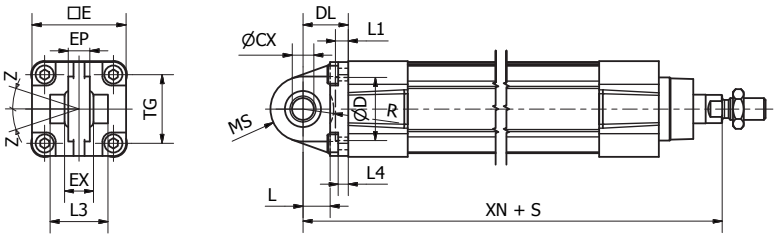

According to ISO 15552

Bore Size mm	CX mm	D mm	DL mm	E mm	EP mm	EX mm	L mm	L1 mm	L3 mm	L4 mm	MS mm	R mm	TG mm	XN* mm	Z mm	Weight kg	Part Number
32	10	30	22	45	10.5	14	12	7	-	5.5	16	-	32.5	142	4°	0.09	**P1C-4KMSB**
40	12	35	25	52	12	16	15	7	-	5.5	18	-	38	160	4°	0.13	**P1C-4LMSB**
50	16	40	27	65	15	21	15	7	51	6.5	21	19	46.5	170	4°	0.24	**P1C-4MMSB**
63	16	45	32	75	15	21	20	7	-	6.5	23	-	56.5	190	4°	0.29	**P1C-4NMSB**
80	20	45	36	95	18	25	20	9	74	10	28	24	72	210	4°	0.59	**P1C-4PMSB**
100	20	55	41	115	18	25	25	9	140	10	30	32	89	230	4°	0.78	**P1C-4QMSB**
125	30	60	50	140	25	37	30	9	-	10	40	-	110	275	4°	1.38	**P1C-4RMSB**

*Does not apply to cylinders with piston rod extension or lock units.

Clevis Bracket - MP2

Intended for flexible mounting of cylinder. Can be combined with clevis bracket MP4 and pivot bracket with rigid bearing AB7.

Materials:

- Clevis bracket: Aluminum
- Pin: Surface hardened steel
- Locking pin: Spring steel
- Circlips according to DIN 471: Spring steel
- Mounting screws acc. to DIN 912: Zinc-plated steel 8.8

Supplied complete with mounting screws for attachment to the cylinder.

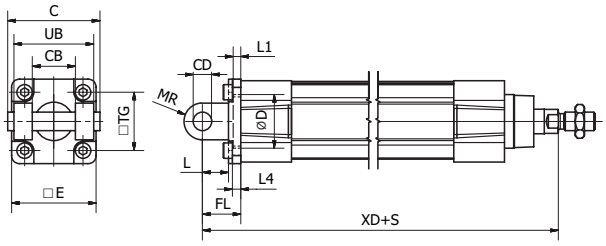

According to ISO 15552

Bore Size mm	C mm	E mm	UB mm	CB mm	TG mm	FL mm	L1 mm	L mm	L4 mm	D mm	CD mm	MR mm	XD* mm	Weight kg	Part Number
32	53	45	45	26	32.5	22	5	13	5.5	30	10	10	142	0.08	**P1C-4KMTB**
40	60	52	52	28	38	25	5	16	5.5	35	12	12	160	0.10	**P1C-4LMTB**
50	68	65	60	32	46.5	27	5	16	6.5	40	12	12	170	0.18	**P1C-4MMTB**
63	78	75	70	40	56.5	32	5	21	6.5	45	16	16	190	0.24	**P1C-4NMTB**
80	98	95	90	50	72	36	5	22	10	45	16	16	210	0.49	**P1C-4PMTB**
100	118	115	110	60	89	41	5	27	10	55	20	20	230	0.73	**P1C-4QMTB**
125	139	140	130	70	110	50	7	30	10	60	25	25	275	1.37	**P1C-4RMTB**

*Does not apply to cylinders with piston rod extension or lock units.

Clevis Bracket - MP4

Intended for flexible mounting of cylinder. Clevis bracket MP4 can be combined with clevis bracket MP2.

Materials:

- Clevis bracket: Aluminum
- Bush: Steel and PTFE
- Mounting screws acc. to DIN 912: Zinc-plated steel 8.8

Supplied complete with mounting screws for attachment to the cylinder.

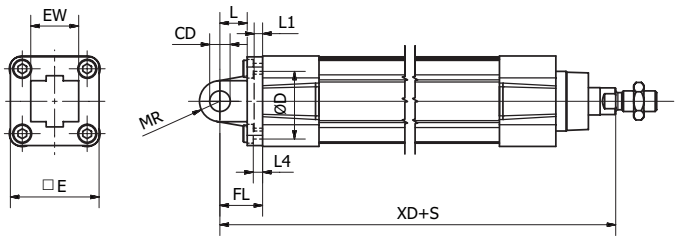

According to ISO 15552

Bore Size mm	CD mm	D mm	E mm	EW mm	FL mm	L mm	L1 mm	L4 mm	MR mm	TG mm	XD* mm	Weight kg	Part Number
32	10	30	47	26	22	12	6.5	6	10.5	32.5	142	0.08	**P1C-4KMEB**
40	12	35	52	28	25	16	5	5.5	12	38	160	0.11	**P1C-4LMEB**
50	12	40	65	32	27	16	5	6.5	12	46.5	170	0.18	**P1C-4MMEB**
63	16	45	78	40	32	21	5	6.5	16	56.5	190	0.28	**P1C-4NMEB**
80	16	45	95	50	36	22	5	10	16	72	210	0.52	**P1C-4PMEB**
100	20	55	115	60	41	27	5	10	20	89	230	0.79	**P1C-4QMEB**
125	25	60	140	70	50	30	7	10	25	110	275	1.46	**P1C-4RMEB**

*Does not apply to cylinders with piston rod extension or lock units.

Clevis Bracket - AB6

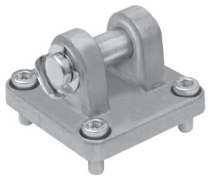

Intended for flexible mounting of cylinder. Clevis bracket AB6 can be combined with pivot brackets MP6 and CS7 or swivel rod eye AP6.

Materials:

- Clevis bracket: Aluminum
- Pin: Surface hardened steel
- Locking pin: Spring steel
- Circlips according to DIN 471: Spring steel
- Mounting screws acc. to DIN 912: Zinc-plated steel 8.8

Supplied complete with mounting screws for attachment to the cylinder.

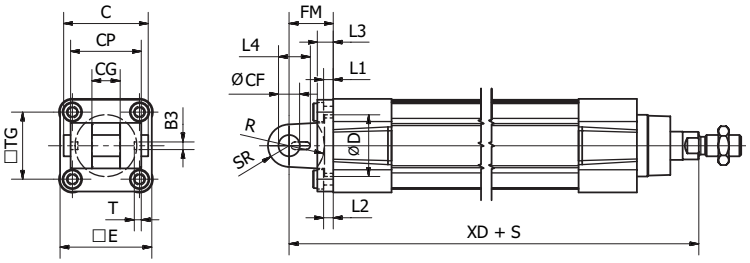

According to ISO 15552

Bore Size mm	B3 mm	C mm	CF mm	CG mm	CP mm	D mm	E mm	FM mm	l2 mm	T mm	R mm	L1 mm	L4 mm	L3 mm	SR mm	TG mm	XD* mm	Weight kg	Part Number
32	3.3	41	10	14	34	30	45	22	5.5	3	17	5	16.5	9	10	32.5	142	0.04	**P1C-4KMCB**
40	4.3	48	12	16	40	35	52	25	5.5	4	20	5	18	9	12	38	160	0.07	**P1C-4LMCB**
50	4.3	54	16	21	45	40	65	27	6.5	4	22	5	22	11	14	46.5	170	0.11	**P1C-4MMCB**
63	4.3	60	16	21	51	45	75	32	6.5	4	25	5	22	11	18	56.5	190	0.19	**P1C-4NMCB**
80	4.3	75	20	25	65	45	95	36	10.0	4	30	5	26	14	20	72	210	0.38	**P1C-4PMCB**
100	6.3	85	20	25	75	55	115	41	10.0	4	32	5	26	14	22	89	230	0.61	**P1C-4QMCB**
125	6.3	110	30	37	97	60	140	50	10.0	6	42	7	39	20	25	110	275	1.10	**P1C-4RMCB**

*Does not apply to cylinders with piston rod extension or lock units.

Pivot Bracket with Swivel Bearing - CS7

Intended for use together with clevis bracket AB6.

Materials:

- Pivot bracket: Aluminum
- Swivel bearing acc. to DIN 648K: Hardened steel

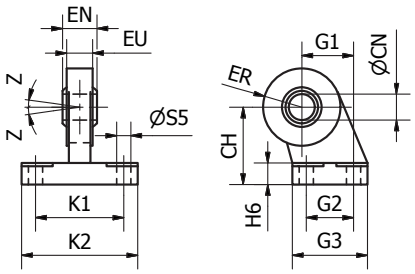

According to ISO 15552

Bore Size mm	CN mm	S5 mm	K1 mm	K2 mm	EU mm	G1 mm	G2 mm	EN mm	G3 mm	CH mm	H6 mm	ER mm	Z mm	Weight kg	Part Number
32	10	6.6	38	51	10.5	21	18	14	31	32	10	15	4°	0.18	**P1C-4KMAF**
40	12	6.6	41	54	12.0	24	22	16	35	36	10	18	4°	0.27	**P1C-4LMAF**
50	16	9.0	50	65	15.0	33	30	21	45	45	12	20	4°	0.46	**P1C-4MMAF**
63	16	9.0	52	67	15.0	37	35	21	50	50	12	23	4°	0.55	**P1C-4NMAF**
80	20	11.0	66	86	18.0	47	40	25	60	63	14	27	4°	0.97	**P1C-4PMAF**
100	20	11.0	76	96	18.0	55	50	25	70	71	15	30	4°	1.33	**P1C-4QMAF**
125	30	13.5	94	124	25.0	70	60	37	90	90	20	40	4°	3.00	**P1C-4RMAF**

3 and 4 Position Flange - JP1

Mounting kit for back to back mounted cylinders, 3 and 4 position cylinders.

Materials:

- Mounting: Aluminum
- Mounting screws: Zinc-plated steel 8.8

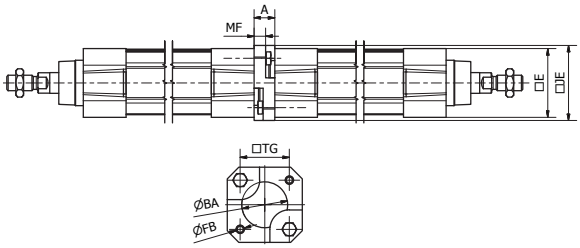

Bore Size mm	A mm	ØBA mm	E mm	ØFB mm	JE mm	MF mm	TG mm	Weight kg	Part Number
32	16	30	47	6.5	50	9	32.5	0.04	**P1E-6KB0**
40	16	35.5	53	6.5	58	9	38.0	0.07	**P1E-6LB0**
50	20	40.5	64.5	8.5	66	6	46.5	0.08	**P1E-6MB0**
63	20	45.5	75	8.5	80	6	56.5	0.16	**P1E-6NB0**
80	25	45.5	94	10.5	99	8	72.0	0.30	**P1E-6PB0**
100	25	55.5	111	10.5	118	8	89.0	0.54	**P1E-6QB0**

Pivot Brackets for MT Trunnion - AT4

Intended for use together with trunnion MT4.

Materials:

- Pivot bracket: Surface-treated aluminum
- Bush: Bronze

Supplied in pairs

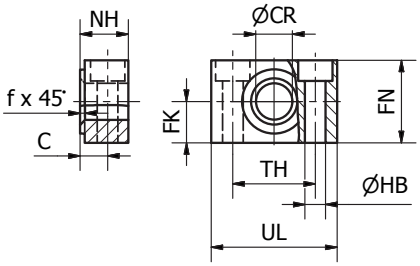

According to ISO 15552

Bore Size mm	UL mm	NH mm	TH mm	C mm	CR mm	HB mm	FN mm	FK mm	fx45° mm	Weight kg	Part Number
32	46	18	32	10.5	12	6.6	30	15	1.0	0.08	**9301054261**
40	55	21	36	12.0	16	9	36	18	1.6	0.14	**9301054262**
50	55	21	36	12.0	16	9	36	18	1.6	0.14	**9301054262**
63	65	23	42	13.0	20	11	40	20	1.6	0.21	**9301054264**
80	65	23	42	13.0	20	11	40	20	1.6	0.21	**9301054264**
100	75	28.5	50	16.0	25	14	50	25	2.0	0.36	**9301054266**
125	75	28.5	50	16.0	25	14	50	25	2.0	0.36	**9301054266**

Flange Trunnion - MT5 / MT6

Intended for articulated mounting of cylinder. This trunnion can be flange mounted on the front or rear end cover of the cylinder.

Materials:

- Trunnion: Zinc-plated steel
- Screws: Zinc-plated steel 8.8

Delivered complete with mounting screws for attachment to the cylinder.

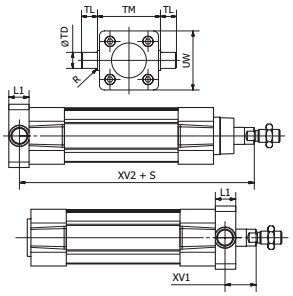

According to ISO 15552

Bore Size mm	L1 mm	R mm	TD (e9) mm	TL (h14) mm	TM (h14) mm	UW mm	XV1* mm	XV2* mm	Weight kg	Part Number
32	14	1.0	12	12	50	46	19.5	127.0	0.14	**P1D-4KMYF**
40	19	1.6	16	16	63	59	21.0	144.5	0.39	**P1D-4LMYF**
50	19	1.6	16	16	75	69	28.0	152.5	0.51	**P1D-4MMYF**
63	24	1.6	20	20	90	84	25.5	170.0	1.04	**P1D-4NMYF**
80	24	1.6	20	20	110	102	34.5	186.0	1.57	**P1D-4PMYF**
100	29	2.0	25	25	132	125	37.0	203.5	3.00	**P1D-4QMYF**

* Does not apply to cylinders with piston rod extension or lock units.
To fit a flange mounted trunnion at the front end cover of a cylinder with lock unit, the piston rod must be extended.
This is in order to provide the same WH dimensions as for the P1F base cylinder.

Center Trunnion - MT4

Available for P1F Profile and Tie-Rods versions the MT4 center trunnion when combined with AT4 pivot brackets is intended for articulated mounting of the cylinder. The trunnion is free so that it can be fixed afterward when the cylinder is at the right place on the machine.

Material:

- Zinc plated steel

Refer to the model code page 16 for ordering cylinder with trunnion.

Important note: the rear end cylinder cover needs to be removed for adding the trunnion when ordered as a single kit.

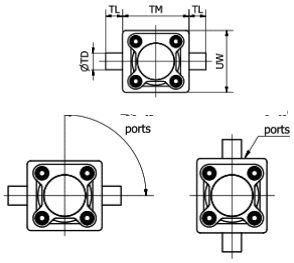

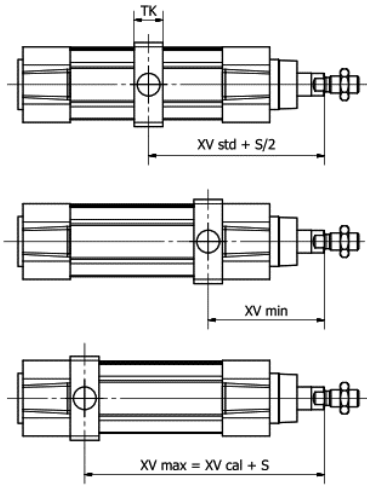

According to ISO 15552					P1F-S/K				P1F-T/N				P1F-L	P1F-H		
Bore Size mm	TL h14 mm	TM h14 mm	ØTD e9 mm	XV* std mm	TK mm	UW mm	XV* min mm	XV* cal mm	TK mm	UW mm	XV* min mm	XV* cal mm	Adder to XV*		Part Number Smooth Profile	Part Number Tie-Rods
32	12	50	12	73	18	52	65	81	15	46	63	83	27	48	**P1F-4KMY**	**P1F-4KMYT**
40	16	63	16	83	20	60	74	91	20	59	74	91	22	55	**P1F-4LMY**	**P1F-4LMYT**
50	16	75	16	90	20	71	82	98	20	69	82	98	20	70	**P1F-4MMY**	**P1F-4MMYT**
63	20	90	20	98	26	84	91	104	25	84	90	105	28	70	**P1F-4NMY**	**P1F-4NMYT**
80	20	110	20	110	26	105	100	120	25	102	99	121	37	90	**P1F-4PMY**	**P1F-4PMYT**
100	25	132	25	120	32	129	113	127	30	125	112	128	50	92	**P1F-4QMY**	**P1F-4QMYT**
125	25	160	25	145	33	154	134	156	33	155	134	156	44	122	**P1F-4RMY**	**P1F-4RMYT**

*Does not apply to cylinders with piston rod extension or lock units.

Swivel Rod Eye - AP6

Swivel rod eye for articulated mounting of the cylinder. Swivel rod eye can be combined with clevis bracket AB6.

Materials:

- Swivel rod eye: Zinc-plated steel
- Swivel bearing according to DIN 648K: hardened steel
- Swivel rod eye: Stainless steel
- Swivel bearing according to DIN 648K: Hardened steel

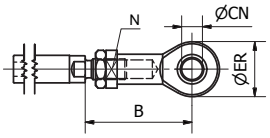

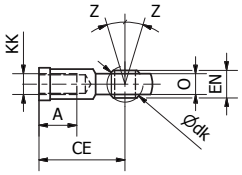

According to ISO 8139

Bore Size mm	A mm	B min mm	B max mm	CE mm	CN mm	EN mm	ER mm	KK	LE dk	N mm	O mm	Z	Weight kg	Part Number Galvanized Steel	Part Number Stainless Steel
32	15	48.0	55	43	10	14	29	M10x1.25	19.0	17	10.5	13°	0.07	**P1C-4KRS**	**P1S-4JRT**
40	18	56.0	62	50	12	16	33	M12x1.25	22.2	19	12.0	13°	0.11	**P1C-4LRS**	**P1S-4LRT**
50	24	72.0	80	64	16	21	43	M16x1.5	28.5	22	15.0	15°	0.21	**P1C-4MRS**	**P1S-4MRT**
63	24	72.0	80	64	16	21	43	M16x1.5	28.5	22	15.0	15°	0.21	**P1C-4MRS**	**P1S-4MRT**
80	30	87.0	97	77	20	25	51	M20x1.5	34.9	30	18.0	15°	0.38	**P1C-4PRS**	**P1S-4PRT**
100	30	87.0	97	77	20	25	51	M20x1.5	34.9	30	18.0	15°	0.38	**P1C-4PRS**	**P1S-4PRT**
125	45	123.5	137	110	30	37	70	M27x2	50.8	41	25.0	15°	1.15	**P1C-4RRS**	**P1S-4RRT**

Clevis - AP2

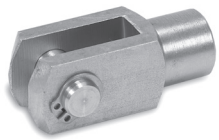

Stainless steel

Galvanized steel

Clevis for articulated mounting of the cylinder.

Materials:

- Clevis, clip: Zinc-plated steel
- Pin: Hardened steel
- Clevis, clip: Stainless steel
- Pin: Stainless steel

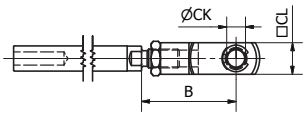

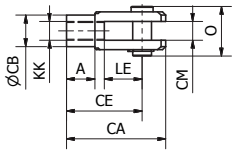

According to ISO 8140

Bore Size mm	A mm	B min mm	B max mm	CA mm	CB mm	CE mm	CK mm	CL mm	CM mm	KK	LE mm	O mm	Weight kg	Part Number Galvanized Steel	Part Number Stainless Steel
32	15	45	52	52	18	40	10	20	10	M10x1.25	20	25	0.09	**P1C-4KRC**	**P1S-4JRD**
40	18	54	60	62	20	48	12	24	12	M12x1.25	24	31	0.15	**P1C-4LRC**	**P1S-4LRD**
50	24	72	80	83	26	64	16	32	16	M16x1.5	32	40	0.34	**P1C-4MRC**	**P1S-4MRD**
63	24	72	80	83	26	64	16	32	16	M16x1.5	32	40	0.34	**P1C-4MRC**	**P1S-4MRD**
80	30	90	100	105	34	80	20	40	20	M20x1.5	40	50	0.67	**P1C-4PRC**	**P1S-4PRD**
100	30	90	100	105	34	80	20	40	20	M20x1.5	40	50	0.67	**P1C-4PRC**	**P1S-4PRD**
125	40	123.5	137	148	48	110	30	55	30	M27x2.0	54	65	1.80	**P1C-4RRC**	**P1S-4RRD**

Flexo Coupling - PM5

Flexo coupling for articulated mounting of piston rod. Flexo fitting is intended to take up axial angle errors within a range of ±4°.

Materials:

- Flexo coupling, nut: Zinc-plated steel

Supplied complete with galvanized adjustment nut.

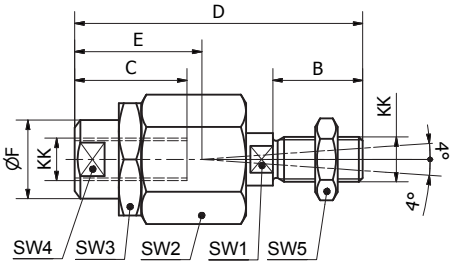

Bore Size mm	KK	B mm	C mm	D mm	E mm	ØF mm	SW1 mm	SW2 mm	SW3 mm	SW4 mm	SW5 mm	Weight kg	Part Number
32	M10x1.25	20	23	70	31	21	12	30	30	19	17	0.23	**P1C-4KRF**
40	M12x1.25	24	30	77	31	21	12	30	30	19	19	0.23	**P1C-4LRF**
50	M16x1.5	32	32	108	45	33.5	19	41	41	30	24	0.65	**P1C-4MRF**
63	M16x1.5	32	32	108	45	33.5	19	41	41	30	24	0.65	**P1C-4MRF**
80	M20x1.5	40	42	122	56	33.5	19	41	41	30	30	0.71	**P1C-4PRF**
100	M20x1.5	40	42	122	56	33.5	19	41	41	30	30	0.71	**P1C-4PRF**
125	M27x2	54	48	147	51	39	24	55	55	32	41	1.60	**P1C-4RRF**

Nuts

Intended for fixed mounting of accessories to the piston rod.

Material: Zinc-plated steel

All P1D cylinders are delivered with a zinc-plated steel piston rod nut.

Stainless Steel Nut

Material: Stainless steel A2

Acid-proof nut

Material: Acid-proof steel A4

Cylinders with acid-proof piston rod are supplied with nut of acid-proof steel.

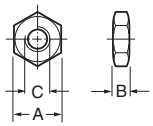

According to DIN 439 B

Bore Size mm	A mm	B mm	C	Weight kg	Part Numbers Steel	Stainless Steel	Acid-proof
32	17	5.0	M10x1.25	0.007	**0867340300**	**9126725404**	**0261109919**
40	19	6.0	M12x1.25	0.010	**0867340400**	**9126725405**	**0261109920**
50	24	8.0	M16x1.5	0.021	**0867340600**	**9126725406**	**0261109917**
63	24	8.0	M16x1.5	0.021			
80	30	10.0	M20x1.5	0.040	**0261109911**	**0261109921**	**0261109916**
100	30	10.0	M20x1.5	0.040			
125	41	13.5	M27x2	0.100	**0867340900**	**0261109922**	**0261109918**
160/200	55	18.0	M36x2	C.F.	**L075540036**	Consult factory	Consult factory

C.F. = Consult Factory

Drop-in sensors

The P8S sensors can easily be installed from the side in the sensor groove, at any position along the piston stroke.The sensors are completely recessed and thus mechanically protected. Choose between electronic or reed sensors and several cable lengths and 8 mm and M12 connectors.

Electronic sensors

The electronic sensors are “Solid State”, i.e. they have no moving parts at all. They are provided with short-circuit protection and transient protection as standard. The built-in electronics make the sensors suitable for applications with high on and off switching frequency, and where very long service life is required.

Reed sensors

The sensors are based on proven reed switches, which offer reliable function in many applications. Simple installation, a protected position on the cylinder and clear LED indication.

	Electronic	Reed
Cylinder type:	Profile with T-slot	
Cylinder type with adaptor:	Profile with S-slot (dovetail) | Tie rods | Round cylinders	
Installation:	Drop-in. Fixed by 1.5 mm stainless steel allen key or flathead screwdriver.	
Housing length:	34.7 mm | 31.5 mm (ATEX)	
Output Type / Function:	PNP, Normally Open (NO) | NPN, Normally Closed (NC)	Normally Open (NO) | Normally Closed (NC)
Switching (on/off) switching frequency:	⩽1000 Hz	± 400 Hz
Degree of Protection (IP):	IP67	
Power consumption:	⩽ 10 mA	-
Input Supply Voltage Range:	10 to 30 V DC | 18 to 30 V DC (ATEX)	10 to 30 | 10 to 120 | 10 to 230 V AC/DC (2-wire) | 10 to 30 V AC/DC (3-wire)
Voltage Drop:	⩽ 2,2 V	⩽ 3,5 V (2-wire NO) | ⩽ 0,1 V (3-wire) | ⩽ 0,1 V (2-wire NC)
Continuous output current:	⩽ 100 mA | ⩽ 70 mA (ATEX)	⩽ 100 mA (2-wire NO) | ⩽ 500 mA (3-wire) | ⩽ 500 mA (2-wire NC)
Switching capacity:	-	⩽ 10 W
Hazardous area category:	3G / 3D (ATEX)	-
Protection Class:	III	II (2-wire) | III (3-wire)
Response Sensitivity:	2.65.. 2.95 mT	2.1.. 3.4 mT
Overrun Distance:	3 mm	9 mm
Hysteresis:	⩽ 0.5 mT	⩽ 0.2 mT
Repeatability:	⩽ 0.1 mT	
Reverse Polarity Protection:	Yes	
Short-circuit Protection:	Yes	-
Power-up Pulse Protection:	Yes	-
Ambient Operating Temperature Range:	-25 to +75 °C (PUR cable) | -20 to +70°C (PVC cable) | -20 to +45°C (ATEX)	
Shock and Vibration resistance:	30 g 11 ms / 10 ... 55 Hz, 1 mm	
EMC:	According to EN 60947-5-2	
Industry Standard:	CE | C UL US | RoHs | Ex	CE | C UL US | RoHs
UL Certification:	On request	
Housing Material:	Plastic polyamide PA12 (ATEX) | PA66	Plastic polyamide PA12 (2-wire 240V) | PA66
Cable Specification:	PUR (Polyurethane) | PVC (Polyvinyl Chloride)	
Conductor Cross-Section:	0.14 mm² (3 wire)	0.14 mm² (3-wire) | 0.12 mm² (2-wire)
Colour of LED:	Yellow	
Connection Style:	M8 snap-in | M8R (knurled nuts) | M12 (knurled nuts) | None (Flying lead)	

Electronic sensors

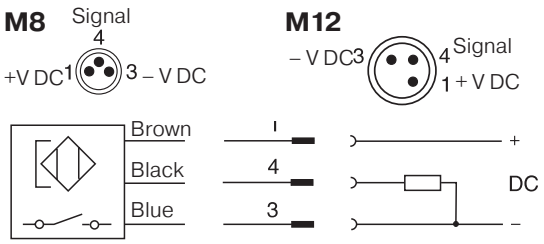

Reed sensors

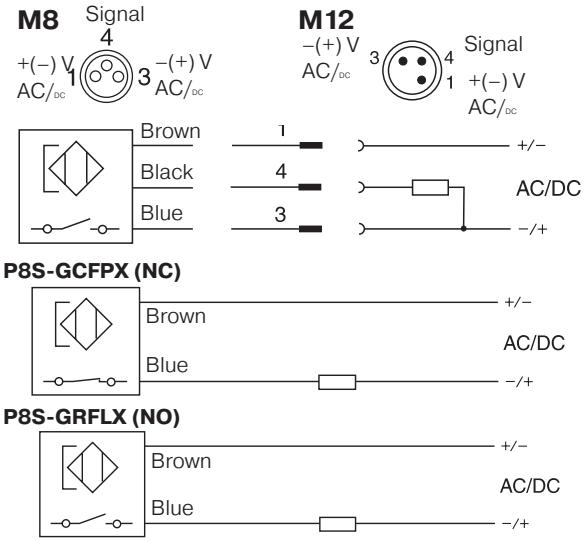

Dimensions [mm]

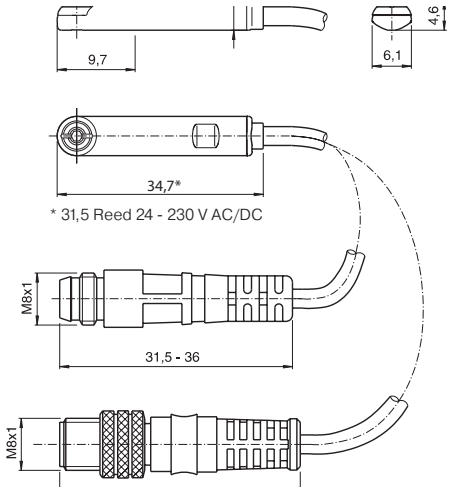

Tie Rod Bracket Assembly

Tie Rod Bracket Assembly is necessary for Global and Mini-Global Sensor installation on all tie rod construction cylinders.

Part number P8S-TMAOX fits 32-200mm bores for Global Sensors

P8S-TMAOX

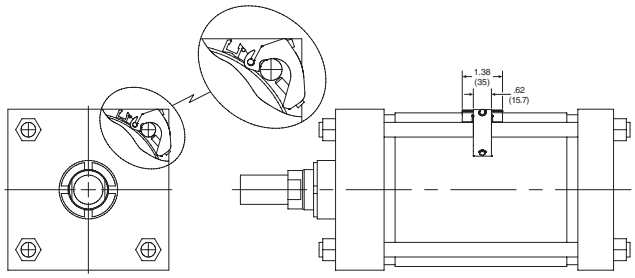

Sensor Ordering Information

Output/Function	Cable/Connector	Weight kg	Part Number
Electronic sensors, 10-30 V DC			
PNP type, normally open	0.27 m PUR cable and 8 mm snap-in male connector	0.007	**P8S-GPSHX**
PNP type, normally open	0.27 m PUR cable and M12 screw male connector	0.015	**P8S-GPMHX**
PNP type, normally open	3 m PVC cable without connector	0.030	**P8S-GPFLX**
PNP type, normally open	10 m PVC cable without connector	0.110	**P8S-GPFTX**
Reed sensors, 10-30 V AC/DC			
Normally open	0.27 m PUR cable and 8 mm snap-in male connector	0.007	**P8S-GSCHZ**
Normally open	0.27 m PUR cable and M12 screw male connector	0.015	**P8S-GSMHX**
Normally open	3 m PVC cable without connector	0.030	**P8S-GSFLX**
Normally open	10 m PVC cable without connector	0.110	**P8S-GSFTX**
Normally closed	5 m PVC cable without connector without LED	0.050	**P8S-GCFPX**
Reed sensors, 10-120 V AC/DC			
Normally open	3 m PVC cable without connector	0.030	**P8S-GRFLX**
Reed sensors, 24-230 V AC/DC			
Normally open	3 m PVC cable without connector	0.030	**P8SAGRFLX2**

Male connectors for connecting cables

Cable connectors for producing your own connecting cables. The connectors can be quickly attached to the cable without special tools. Only the outer sheath of the cable is removed. The connectors are available for M8 screw connectors and meet protection class IP65.

Technical data

Operating voltage:	max. 32V AC/DC
Operating current per contact:	max. 4 A
Connection cross section:	0.25.... 0.5 mm² (conductor diameter min 0.1)
Protection class:	IP65 And IP67 when plugged and screwed down (EN 60529)
Temperature range:	- 25... +85°C

Connector	Weight kg	Part Number
M8 screw connector	0.018	**P8CS0803J**
M12 screw connector	0.022	**P8CS1204J**

Connecting cables

Description	Weight g	For Product Series	Part Number
Cable flex PVC 3 meter with 8mm snap-in connector / flying leads	70	P8S Sensors with M8	**9126344341**
Cable flex PVC 10 meter with 8mm snap-in connector / flying leads	210	P8S Sensors with M8	**9126344342**
Cable PUR 3 meter with 8mm snap-in female connector / flying leads	70	P8S Sensors with M8	**9126344345**
Cable flex PUR 10 meter with 8mm snap-in connector / flying leads	210	P8S Sensors with M8	**9126344346**
Cable PVC 2.5 meter with M8 screw connector / flying leads	60	P8S Sensors with knurled M8	**4041**
Cable PVC 5 meter with M8 screw female connector / flying leads	120	P8S Sensors with knurled M8	**KC3104**

Continuous Position Sensing (CPS)

Analog signal or IO-Link communication for linear cylinders many applications require more than just end of stroke sensing of an actuator, but traditional methods of continuous sensing are expensive and difficult to implement. Parker's CPS series of the P8S sensor family enables quick, easy, precise, and contactless position sensing of a piston. This can be installed on a standard linear actuator and offers an outstanding price to performance ratio.

Product Features:

Continuous position sensing
- IO-Link communication with M12 connector
- No modification to the actuator
- Analog version with M8 connector
- 5 sizes with sensing ranges from 32 mm to 256 mm
- IP67 design suitable for any industrial application
- Yellow teach button for easy set-up

Technical specification:

1 ms sampling rate
0.03% full scale resolution
0.06% full scale repeatability
0.3 mm Linearity error

How it installs:

The Parker CPS requires the use of a magnetic piston. The product will ft T-slot cylinders without any additional mounting hardware.
1. Pivot the sensor into the slot
2. Teach the CPS unit the desired measuring range
3. Tighten set screws

Dimensions in mm (inch)

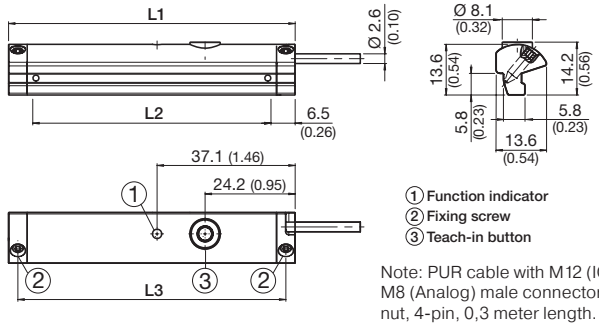

Note: PUR cable with M12 (IO-Link) or M8 (Analog) male connector knurled nut, 4-pin, 0,3 meter length.

How it connects:

Analog version has a M8 connector and a voltage output of 0-10V as well as a current output of 4-20mA. IO-Link version has a M12 connector and transmits position via 2 bytes of process input data and also allows for parameter control of measuring range and locking of the teach button. It can be controlled by Class A or Class B IO-Link Masters.

How it works:

The CPS product detects the position of an actuator via the magnet on the piston. The sensor settings can easily be adjusted during installation using the yellow teach button or during operation over the IO-Link communication. This upgrades the functionality of the pneumatic actuator by making it more intelligent and versatile in support of the Industry 4.0 initiative.

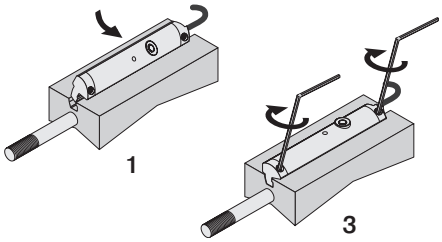

			Part Number	
L1	L2 *	L3	Analog	IO-Link
45	32	40	**P8SAGACHA**	**P8SAGHMHA**
77	64	72	**P8SAGACHB**	**P8SAGHMHB**
141	128	136	**P8SAGACHD**	**P8SAGHMHD**
205	192	200	**P8SAGACHF**	**P8SAGHMHF**
269	256	264	**P8SAGACHH**	**P8SAGHMHH**

*L2 equal to the measuring range

Ordering Data - Drop in T-slot, Turn, Screw, it's done

Output	Measuring Length	Configuration Option	Order Code	Weight g	For Product Series
Analog	32 mm	Teach Button	**P8SAGACHA**	16	With T-slot groove *
	64 mm		**P8SAGACHB**	26	
	128 mm		**P8SAGACHD**	46	
	192 mm		**P8SAGACHF**	66	
	256 mm		**P8SAGACHH**	86	
IO-Link	32 mm	Teach Button or IO-Link parameter	**P8SAGHMHA**	20	With T-slot groove *
	64 mm		**P8SAGHMHB**	30	
	128 mm		**P8SAGHMHD**	50	
	192 mm		**P8SAGHMHF**	70	
	256 mm		**P8SAGHMHH**	90	

* Required magnetic field sensitivity: 3mT / -2 mT (Analogue) / 3mT (IO-Link)
Note: PUR cable with M12 (IO-Link) or M8 (Analogue) male connector knurled nut, 4-pin, 0,3 meter length. Please consult for measuring range 96, 160 & 224 mm.

Complete seal kits consisting of:

- 2 piston seals
- 2 cushioning seals
- 1 wiper / piston rod seal
- 2 o-rings

Grease Type

Type		Part Number
Standard	30 g	**9127394541**
High temperature	30 g	**9127394521**
Low temperature	30 g	**9127394541**

Bore Size mm	Standard Temperature [1]	High Temperature [1]	Low Temperature [1]	Metallic Scraper [1] [2]	FKM Wiper Seal [1]	With dyn. Rod Lock [1]
32	**P1F-6032RN**	**P1F-6032RF**	**P1F-6032RL**	**P1F-6032RQ**	**P1F-6032RV**	**P1F-6032RNL**
40	**P1F-6040RN**	**P1F-6040RF**	**P1F-6040RL**	**P1F-6040RQ**	**P1F-6040RV**	**P1F-6040RNL**
50	**P1F-6050RN**	**P1F-6050RF**	**P1F-6050RL**	**P1F-6050RQ**	**P1F-6050RV**	**P1F-6050RNL**
63	**P1F-6063RN**	**P1F-6063RF**	**P1F-6063RL**	**P1F-6063RQ**	**P1F-6063RV**	**P1F-6063RNL**
80	**P1F-6080RN**	**P1F-6080RF**	**P1F-6080RL**	**P1F-6080RQ**	**P1F-6080RV**	**P1F-6080RNL**
100	**P1F-6100RN**	**P1F-6100RF**	**P1F-6100RL**	**P1F-6100RQ**	**P1F-6100RV**	**P1F-6100RNL**
125	**P1F-6125RN**	**P1F-6125RF**	**P1F-6125RL**	**P1F-6125RQ**	**P1F-6125RV**	**P1F-6125RNL**

1) for through piston rod, add K at the end, ie P1F-6032RNK

2) -30 to +80°C

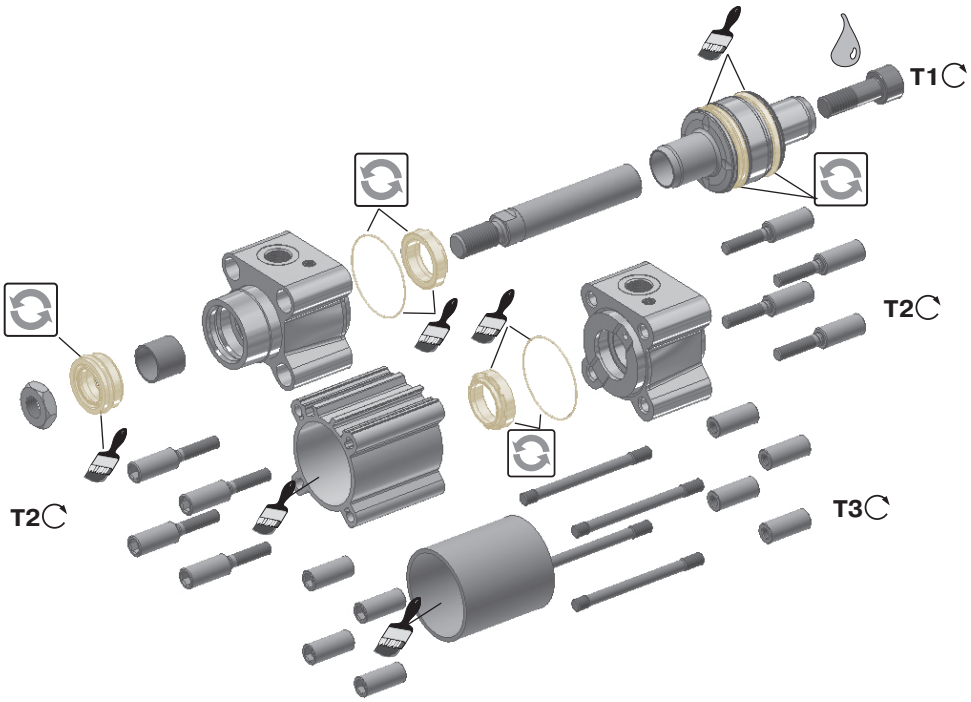

Bore Size mm	Plastic Piston T1 Nm	Al Piston T1 Nm	AF mm	T2 Nm	AF mm	T3 Nm
32	4.5	15	6	11	6	4.5
40	11	30	8	11	6	4.5
50	20	40	10	18	8	9.5
63	20	40	10	18	8	9.5
80	40	120	14	29	6	19
100	120	120	14	29	6	19
125	120	120	14	70	8	40

= Included in seal kit

= Socket head across flats

= Tightening torque

Lubricated with grease

Locking fluid Loctite 270 or Loctite 2701 locking fluid must be used

Specifying air quality (purity) in accordance with ISO8573-1:2010, the international standard for compressed air quality

ISO8573-1 is the primary document used from the ISO8573 series as it is this document which specifies the amount of contamination allowed in each cubic metre of compressed air.

ISO8573-1 lists the main contaminants as Solid Particulate, Water and Oil. The purity levels for each contaminant are shown separately in tabular form, however for ease of use, this document combines all three contaminants into one easy to use table.

ISO8573-1:2010 CLASS	Solid Particulate				Water		Oil
	Maximum number of particles per m^3			Mass Concentration mg/m^3	Vapor Pressure Dewpoint	Liquid g/m^3	Total Oil (aerosol liquid and vapor)
	0,1 - 0,5 micron	0,5 - 1 micron	1 - 5 micron				
0	As specified by the equipment user or supplier and more stringent than Class 1						
1	⩽ 20 000	⩽ 400	⩽ 10	-	⩽ -70 °C	-	0,01
2	⩽ 400 000	⩽ 6 000	⩽ 100	-	⩽ -40 °C	-	0,1
3	-	⩽ 90 000	⩽ 1 000	-	⩽ -20 °C	-	1
4	-	-	⩽ 10 000	-	⩽ +3 °C	-	5
5	-	-	⩽ 100 000	-	⩽ +7 °C	-	-
6	-	-	-	⩽ 5	⩽ +10 °C	-	-
7	-	-	-	5 - 10	-	⩽ 0,5	-
8	-	-	-	-	-	0,5 - 5	-
9	-	-	-	-	-	5 - 10	-
X	-	-	-	> 10	-	> 10	> 10

Specifying air purity in accordance with ISO8573-1:2010

When specifying the purity of air required, the standard must always be referenced, followed by the purity class selected for each contaminant (a different purity class can be selected for each contamination if required).

An example of how to write an air quality specification is shown below:

ISO 8573-1:2010 Class 1.2.1

ISO 8573-1:2010 refers to the standard document and its revision, the three digits refer to the purity classifications selected for solid particulate, water and total oil. Selecting an air purity class of 1.2.1 would specify the following air quality when operating at the standard's reference conditions:

Class 1 - Particulate

In each cubic meter of compressed air, the particulate count should not exceed 20,000 particles in the 0.1 - 0.5 micron size range, 400 particles in the 0.5 - 1 micron size range and 10 particles in the 1 - 5 micron size range.

Class 2 - Water

A pressure dewpoint (PDP) of -40°C or better is required and no liquid water is allowed.

Class 1 - Oil

In each cubic meter of compressed air, not more than 0.01mg of oil is allowed. This is a total level for liquid oil, oil aerosol and oil vapor.

ISO8573-1:2010 Class zero

- **Class 0 does not mean zero contamination.**
- **Class 0 requires the user and the equipment manufacturer to agree contamination levels as part of a written specification.**
- **The agreed contamination levels for a Class 0 specification should be within the measurement capabilities of the test equipment and test methods shown in ISO8573 Pt 2 to Pt 9.**
- **The agreed Class 0 specification must be written on all documentation to be in accordance with the standard.**
- **Stating Class 0 without the agreed specification is meaningless and not in accordance with the standard.**
- **A number of compressor manufacturers claim that the delivered air from their oil-free compressors is in compliance with Class 0.**
- **If the compressor was tested in clean room conditions, the contamination detected at the outlet will be minimal. Should the same compressor now be installed in typical urban environment, the level of contamination will be dependent upon what is drawn into the compressor intake, rendering the Class 0 claim invalid.**
- **A compressor delivering air to Class 0 will still require purification equipment in both the compressor room and at the point of use for the Class 0 purity to be maintained at the application.**
- **Air for critical applications such as breathing, medical, food, etc typically only requires air quality to Class 2.2.1 or Class 2.1.1.**
- **Purification of air to meet a Class 0 specification is only cost effective if carried out at the point of use.**

Safety Guide For Selecting And Using Pneumatic Division Products And Related Accessories

⚠ WARNING:

FAILURE OR IMPROPER SELECTION OR IMPROPER USE OF PNEUMATIC DIVISION PRODUCTS, ASSEMBLIES OR RELATED ITEMS ("PRODUCTS") CAN CAUSE DEATH, PERSONAL INJURY, AND PROPERTY DAMAGE. POSSIBLE CONSEQUENCES OF FAILURE OR IMPROPER SELECTION OR IMPROPER USE OF THESE PRODUCTS INCLUDE BUT ARE NOT LIMITED TO:

- Unintended or mistimed cycling or motion of machine members or failure to cycle
- Work pieces or component parts being thrown off at high speeds.
- Failure of a device to function properly for example, failure to clamp or unclamp an associated item or device.
- Explosion
- Suddenly moving or falling objects.
- Release of toxic or otherwise injurious liquids or gasses.

Before selecting or using any of these Products, it is important that you read and follow the instructions below.

1. GENERAL INSTRUCTIONS

1.1. Scope: This safety guide is designed to cover general guidelines on the installation, use, and maintenance of Pneumatic Division Valves, FRLs (Filters, Pressure Regulators, and Lubricators), Vacuum products and related accessory components.

1.2. Fail-Safe: Valves, FRLs, Vacuum products and their related components can and do fail without warning for many reasons. Design all systems and equipment in a fail-safe mode, so that failure of associated valves, FRLs or Vacuum products will not endanger persons or property.

1.3. Relevant International Standards: For a good guide to the application of a broad spectrum of pneumatic fluid power devices see: ISO 4414:1998, Pneumatic Fluid Power – General Rules Relating to Systems. See www.iso.org for ordering information.

1.4. Distribution: Provide a copy of this safety guide to each person that is responsible for selection, installation, or use of Valves, FRLs or Vacuum products. Do not select, or use Parker valves, FRLs or vacuum products without thoroughly reading and understanding this safety guide as well as the specific Parker publications for the products considered or selected.

1.5. User Responsibility: Due to the wide variety of operating conditions and applications for valves, FRLs, and vacuum products Parker and its distributors do not represent or warrant that any particular valve, FRL or vacuum product is suitable for any specific end use system. This safety guide does not analyze all technical parameters that must be considered in selecting a product. The user, through its own analysis and testing, is solely responsible for:

- Making the final selection of the appropriate valve, FRL, Vacuum component, or accessory.
- Assuring that all user's performance, endurance, maintenance, safety, and warning requirements are met and that the application presents no health or safety hazards.
- Complying with all existing warning labels and / or providing all appropriate health and safety warnings on the equipment on which the valves, FRLs or Vacuum products are used; and,
- Assuring compliance with all applicable government and industry standards.

1.6. Safety Devices: Safety devices should not be removed, or defeated.

1.7. Warning Labels: Warning labels should not be removed, painted over or otherwise obscured.

1.8. Additional Questions: Call the appropriate Parker technical service department if you have any questions or require any additional information. See the Parker publication for the product being considered or used, or call 1-800-CPARKER, or go to www.parker.com, for telephone numbers of the appropriate technical service department.

2. PRODUCT SELECTION INSTRUCTIONS

2.1. Flow Rate: The flow rate requirements of a system are frequently the primary consideration when designing any pneumatic system. System components need to be able to provide adequate flow and pressure for the desired application.

2.2. Pressure Rating: Never exceed the rated pressure of a product. Consult product labeling, Pneumatic Division catalogs or the instruction sheets supplied for maximum pressure ratings.

2.3. Temperature Rating: Never exceed the temperature rating of a product. Excessive heat can shorten the life expectancy of a product and result in complete product failure.

2.4. Environment: Many environmental conditions can affect the integrity and suitability of a product for a given application. Pneumatic Division products are designed for use in general purpose industrial applications. If these products are to be used in unusual circumstances such as direct sunlight and/or corrosive or caustic environments, such use can shorten the useful life and lead to premature failure of a product.

2.5. Lubrication and Compressor Carryover: Some modern synthetic oils can and will attack nitrile seals. If there is any possibility of synthetic oils or greases migrating into the pneumatic components check for compatibility with the seal materials used. Consult the factory or product literature for materials of construction.

2.6. Polycarbonate Bowls and Sight Glasses: To avoid potential polycarbonate bowl failures:

- Do not locate polycarbonate bowls or sight glasses in areas where they could be subject to direct sunlight, impact blow, or temperatures outside of the rated range.
- Do not expose or clean polycarbonate bowls with detergents, chlorinated hydro-carbons, keytones, esters or certain alcohols.
- Do not use polycarbonate bowls or sight glasses in air systems where compressors are lubricated with fire resistant fluids such as phosphate ester and di-ester lubricants.

2.7. Chemical Compatibility: For more information on plastic component chemical compatibility see Pneumatic Division technical bulletins Tec-3, Tec-4, and Tec-5

2.8. Product Rupture: Product rupture can cause death, serious personal injury, and property damage.
- Do not connect pressure regulators or other Pneumatic Division products to bottled gas cylinders.
- Do not exceed the maximum primary pressure rating of any pressure regulator or any system component.
- Consult product labeling or product literature for pressure rating limitations.

3. PRODUCT ASSEMBLY AND INSTALLATION INSTRUCTIONS

3.1. Component Inspection: Prior to assembly or installation a careful examination of the valves, FRLs or vacuum products must be performed. All components must be checked for correct style, size, and catalog number. DO NOT use any component that displays any signs of nonconformance.

3.2. Installation Instructions: Parker published Installation Instructions must be followed for installation of Parker valves, FRLs and vacuum components. These instructions are provided with every Parker valve or FRL sold, or by calling 1-800-CPARKER,or at www.parker.com.

3.3. Air Supply: The air supply or control medium supplied to Valves, FRLs and Vacuum components must be moisture-free if ambient temperature can drop below freezing

4. VALVE AND FRL MAINTENANCE AND REPLACEMENT INSTRUCTIONS

4.1. Maintenance: Even with proper selection and installation, valve, FRL and vacuum products service life may be significantly reduced without a continuing maintenance program. The severity of the application, risk potential from a component failure, and experience with any known failures in the application or in similar applications should determine the frequency of inspections and the servicing or replacement of Pneumatic Division products so that products are replaced before any failure occurs. A maintenance program must be established and followed by the user and, at minimum, must include instructions 4.2 through 4.9. Failure to follow routine maintenance can lead to a reduction in the expected service life of the product and can result in damage to the system, personal injury and/or property damage.

4.2. Installation and Service Instructions: Before attempting to service or replace any worn or damaged parts consult the appropriate Service Bulletin for the valve or FRL in question for the appropriate practices to service the unit in question. These Service and Installation Instructions are provided with every Parker valve and FRL sold, or are available by calling 1-800-CPARKER, or by accessing the Parker website at www.parker.com.

4.3. Lockout / Tagout Procedures: Be sure to follow all required lockout and tagout procedures when servicing equipment. For more information see: OSHA Standard – 29 CFR, Part 1910.147, Appendix A, The Control of Hazardous Energy – (Lockout / Tagout)

4.4. Visual Inspection: Any of the following conditions requires immediate system shut down and replacement of worn or damaged components:
- Air leakage: Look and listen to see if there are any signs of visual damage to any of the components in the system. Leakage is an indication of worn or damaged components.
- Damaged or degraded components: Look to see if there are any visible signs of wear or component degradation including but not limited to swelling, bulging, creaks or leaks.
- Kinked, crushed, or damaged hoses. Kinked hoses can result in restricted air flow and lead to unpredictable system behavior.
- Any observed improper system or component function: Immediately shut down the system and correct malfunction.
- Excessive dirt build-up: Dirt and clutter can mask potentially hazardous situations.

Caution: Leak detection solutions should be rinsed off after use.

4.5. Routine Maintenance Issues:
- Remove excessive dirt, grime and clutter from work areas.
- Make sure all required guards and shields are in place.

4.6. Functional Test: Before initiating automatic operation, operate the system manually to make sure all required functions operate properly and safely.

4.7. Service or Replacement Intervals: It is the user's responsibility to establish appropriate service intervals. Valves, FRLs and vacuum products contain components that age, harden, wear, and otherwise deteriorate over time. Environmental conditions can significantly accelerate this process. Valves, FRLs and vacuum components need to be serviced or replaced on routine intervals. Failure to follow routine service can lead to a reduction in the expected service life of the product and can result in damage to the system, personal injury and/or property damage. Service intervals need to be established based on:
- Previous performance experiences.
- Government and / or industrial standards.
- When failures could result in unacceptable down time, equipment damage or personal injury risk.

4.8. Servicing or Replacing of any Worn or Damaged Parts: To avoid unpredictable system behavior that can cause death, personal injury and property damage:
- Follow all government, state and local safety and servicing practices prior to service including but not limited to all OSHA Lockout Tagout procedures (OSHA Standard – 29 CFR, Part 1910.147, Appendix A, The Control of Hazardous Energy – Lockout / Tagout).
- Disconnect electrical supply (when necessary) before installation, servicing, or conversion.
- Disconnect air supply and depressurize all air lines connected to system and Pneumatic Division products before installation, service, or conversion.
- Installation, servicing, and / or conversion of these products must be performed by knowledgeable personnel who understand how pneumatic products are to be applied.
- After installation, servicing, or conversions air and electrical supplies (when necessary) should be connected and the product tested for proper function and leakage. If audible leakage is present, or if the product does not operate properly, do not put product or system into use.
- Warnings and specifications on the product should not be covered or painted over. If masking is not possible, contact your local representative for replacement labels.

4.9. Putting Serviced System Back into Operation: Follow the guidelines above and all relevant Installation and Maintenance Instructions supplied with the valve FRL or vacuum component to insure proper function of the system.

Parker Worldwide

Europe, Middle East, Africa

AE – United Arab Emirates, Dubai
Tel: +971 4 8127100
parker.me@parker.com

AT – Austria, Wiener Neustadt
Tel: +43 (0)2622 23501-0
parker.austria@parker.com

AT – Eastern Europe, Wiener Neustadt
Tel: +43 (0)2622 23501 900
parker.easteurope@parker.com

AZ – Azerbaijan, Baku
Tel: +994 50 2233 458
parker.azerbaijan@parker.com

BE/LU – Belgium, Nivelles
Tel: +32 (0)67 280 900
parker.belgium@parker.com

BG – Bulgaria, Sofia
Tel: +359 2 980 1344
parker.bulgaria@parker.com

BY – Belarus, Minsk
Tel: +48 (0)22 573 24 00
parker.poland@parker.com

CH – Switzerland, Etoy
Tel: +41 (0)21 821 87 00
parker.switzerland@parker.com

CZ – Czech Republic, Klecany
Tel: +420 284 083 111
parker.czechrepublic@parker.com

DE – Germany, Kaarst
Tel: +49 (0)2131 4016 0
parker.germany@parker.com

DK – Denmark, Ballerup
Tel: +45 43 56 04 00
parker.denmark@parker.com

ES – Spain, Madrid
Tel: +34 902 330 001
parker.spain@parker.com

FI – Finland, Vantaa
Tel: +358 (0)20 753 2500
parker.finland@parker.com

FR – France, Contamine s/Arve
Tel: +33 (0)4 50 25 80 25
parker.france@parker.com

GR – Greece, Athens
Tel: +30 210 933 6450
parker.greece@parker.com

HU – Hungary, Budaörs
Tel: +36 23 885 470
parker.hungary@parker.com

IE – Ireland, Dublin
Tel: +353 (0)1 466 6370
parker.ireland@parker.com

IL – Israel
Tel: +39 02 45 19 21
parker.israel@parker.com

IT – Italy, Corsico (MI)
Tel: +39 02 45 19 21
parker.italy@parker.com

KZ – Kazakhstan, Almaty
Tel: +7 7273 561 000
parker.easteurope@parker.com

NL – The Netherlands, Oldenzaal
Tel: +31 (0)541 585 000
parker.nl@parker.com

NO – Norway, Asker
Tel: +47 66 75 34 00
parker.norway@parker.com

PL – Poland, Warsaw
Tel: +48 (0)22 573 24 00
parker.poland@parker.com

PT – Portugal
Tel: +351 22 999 7360
parker.portugal@parker.com

RO – Romania, Bucharest
Tel: +40 21 252 1382
parker.romania@parker.com

RU – Russia, Moscow
Tel: +7 495 645-2156
parker.russia@parker.com

SE – Sweden, Spånga
Tel: +46 (0)8 59 79 50 00
parker.sweden@parker.com

SL – Slovenia, Novo Mesto
Tel: +386 7 337 6650
parker.slovenia@parker.com

TR – Turkey, Istanbul
Tel: +90 216 4997081
parker.turkey@parker.com

UA – Ukraine, Kiev
Tel: +48 (0)22 573 24 00
parker.poland@parker.com

UK – United Kingdom, Warwick
Tel: +44 (0)1926 317 878
parker.uk@parker.com

ZA – South Africa, Kempton Park
Tel: +27 (0)11 961 0700
parker.southafrica@parker.com

North America

CA – Canada, Milton, Ontario
Tel: +1 905 693 3000
www.parker.com/canada

US – USA, Cleveland
Tel: +1 216 896 3000

Asia Pacific

AU – Australia, Castle Hill
Tel: +61 (0)2-9634 7777

CN – China, Shanghai
Tel: +86 21 2899 5000

HK – Hong Kong
Tel: +852 2428 8008

IN – India, Mumbai
Tel: +91 22 6513 7081-85

JP – Japan, Tokyo
Tel: +81 (0)3 6408 3901

KR – South Korea, Seoul
Tel: +82 2 559 0400

MY – Malaysia, Shah Alam
Tel: +60 3 7849 0800

NZ – New Zealand, Mt Wellington
Tel: +64 9 574 1744

SG – Singapore
Tel: +65 6887 6300

TH – Thailand, Bangkok
Tel: +662 186 7000

TW – Taiwan, Taipei
Tel: +886 2 2298 8987

South America

AR – Argentina, Buenos Aires
Tel: +54 3327 44 4129

BR – Brazil, Sao Jose dos Campos
Tel: +55 800 727 5374

CL – Chile, Santiago
Tel: +56 2 623 1216

MX – Mexico, Toluca
Tel: +52 72 2275 4200

European Product Information Centre
Free phone: 00 800 27 27 5374
(from AT, BE, CH, CZ, DE, DK, EE, ES, FI, FR, IE, IL, IS, IT, LU, MT, NL, NO, PL, PT, RU, SE, SK, UK, ZA)

© 2025 Parker Hannifin Corporation

Catalog 0980 05/2025

Parker Hannifin Corporation
Pneumatic Division
135 Quadral Drive
Wadsworth, OH 44281 USA
Phone: (269) 629-5575
Applications Engineering: pdn.technical@support.parker.com
Customer Support: pdn.support@support.parker.com
Web site: www.parker.com/pneumatics